612 mm

220.02 mm

ICE BOID 3PSD9 | ICE BOID 4PSD12

AIR COOLER USER MANUAL

LGA 2066 / 2011 / 1700 / 1851/ 1200 / 115X
AM5/AM4/AM3+/AM3/AM2+/AM2/FM2/FM1

formulav-line.com

Accessories

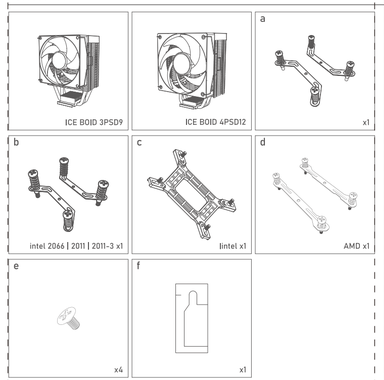

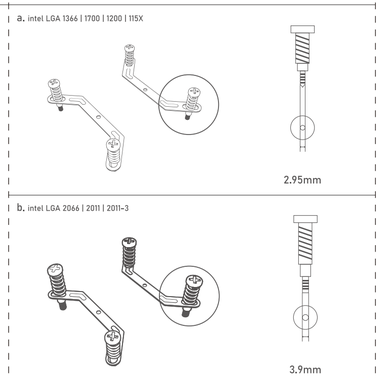

Note

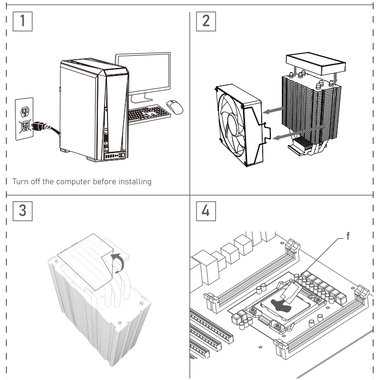

INTEL

5 intel LGA 1366 | 1700 | 1200 | 115X

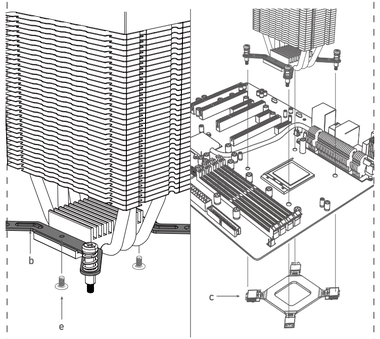

INTEL

5 intel LGA 2066 | 2011 | 2011-3

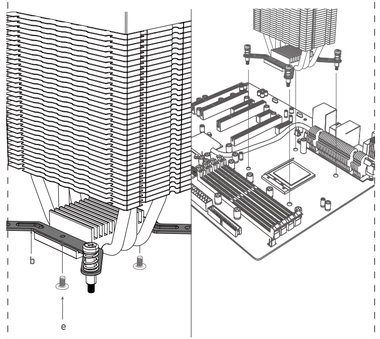

AMD

6 Remove Bracket

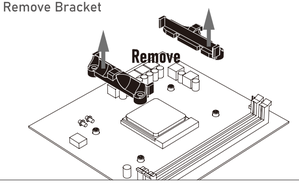

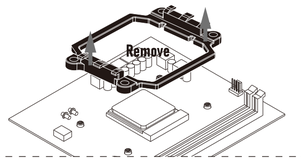

AMD

7 AMD: AM5 | AM4 | AM3+ | AM2+ | AM2 | FM2+ | FM2 FM1

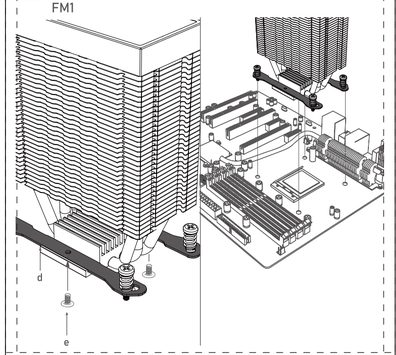

Install Fan

8

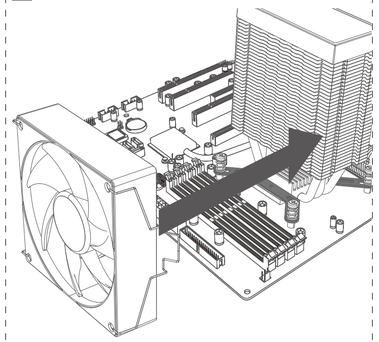

Connector

9

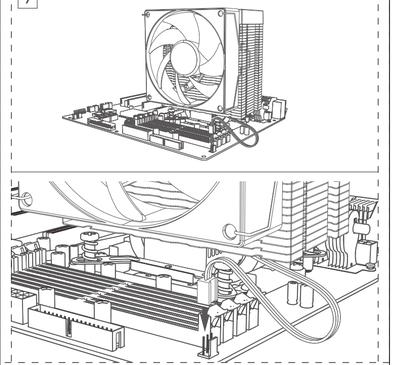

Caution

10 Make sure cooler firmly touch CPU

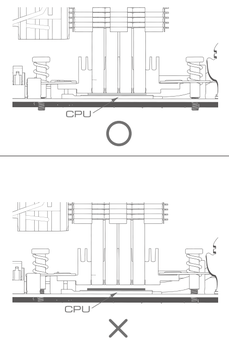

ICE BOID 3PSD9 | ICE BOID 4PSD12

AIR COOLER USER MANUAL

formulav-line.com