ASSASSIN IV Series

Premium CPU Air Cooler

ASSASSIN IV

ASSASSIN IV WH

INTEL-LGA1851/LGA1700/LGA1200/LGA1151/LGA1150/LGA1155 1
INTEL-LGA2066/LGA2011-v3/LGA2011 11
AMD-AM5/AM4 21
Connection 32
Free 12cm fan adapter 33
Product Installation Instructions 36

INTEL & AMD

A

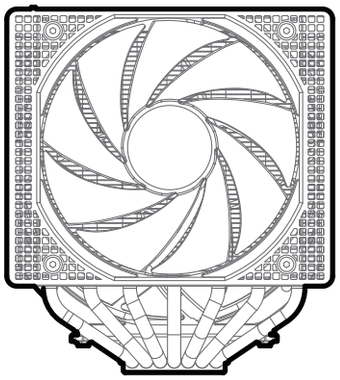

×1

B

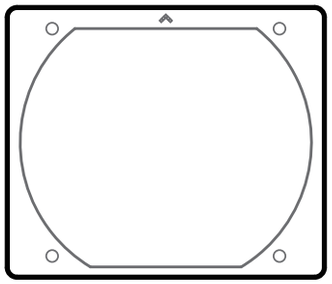

×1

C

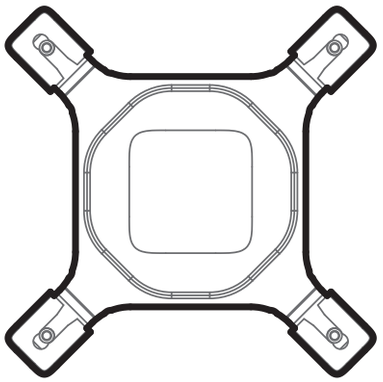

×1

D

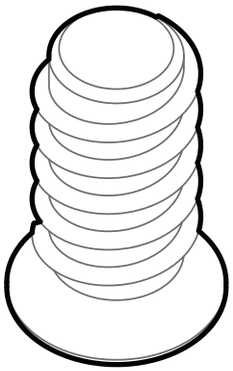

×4

E

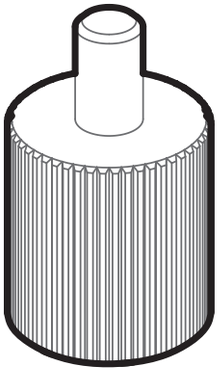

×4

F

×2

G

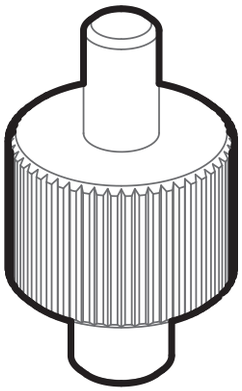

×4

H

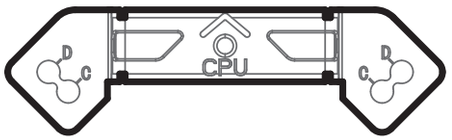

×2

I

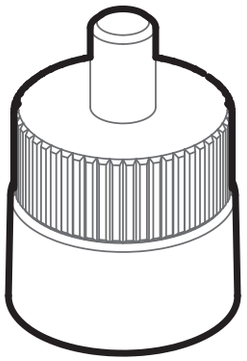

×4

J

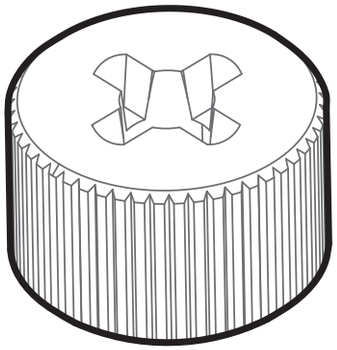

×4

K

Grease Cleanser
CAUTION
• Once opened,please seal it after use and store in air tight container to keep from dry.
• Don't Swallow

×1

L

×1

M

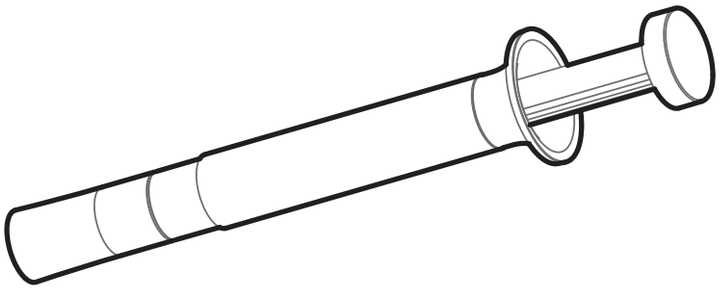

×1

N

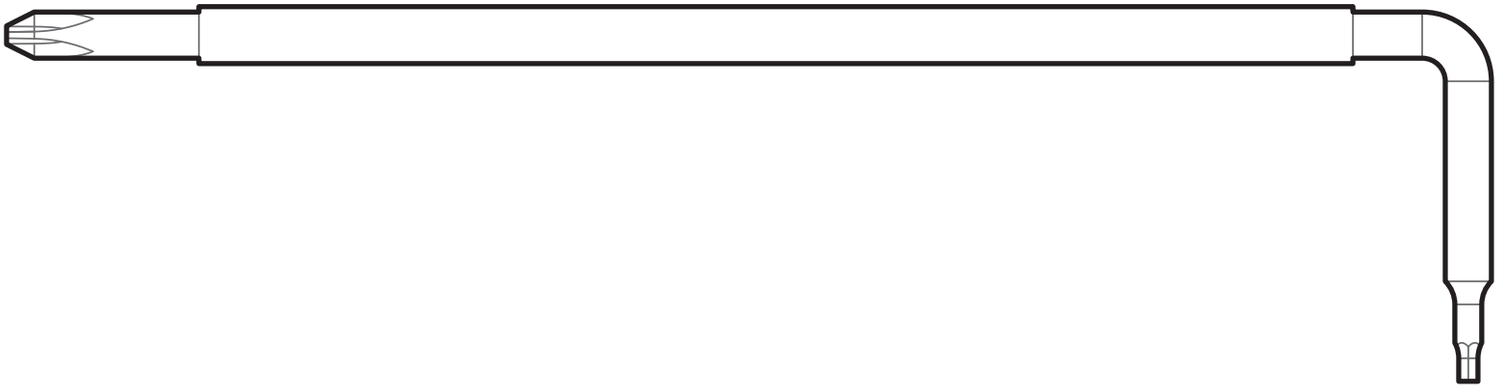

×1

INTEL

LGA1851· LGA1700 · LGA115X

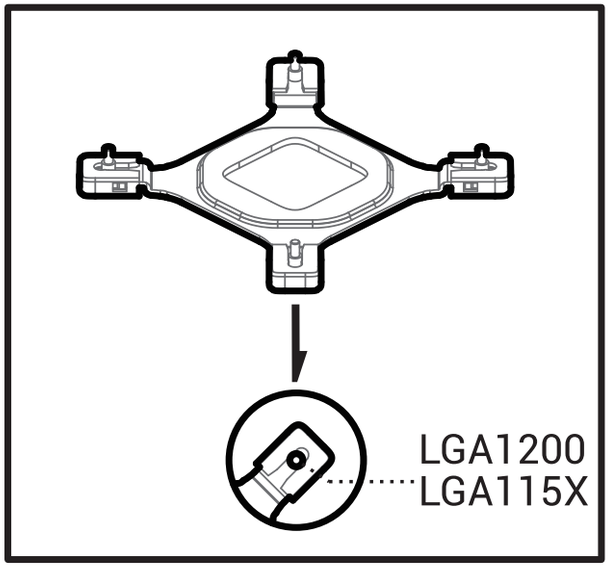

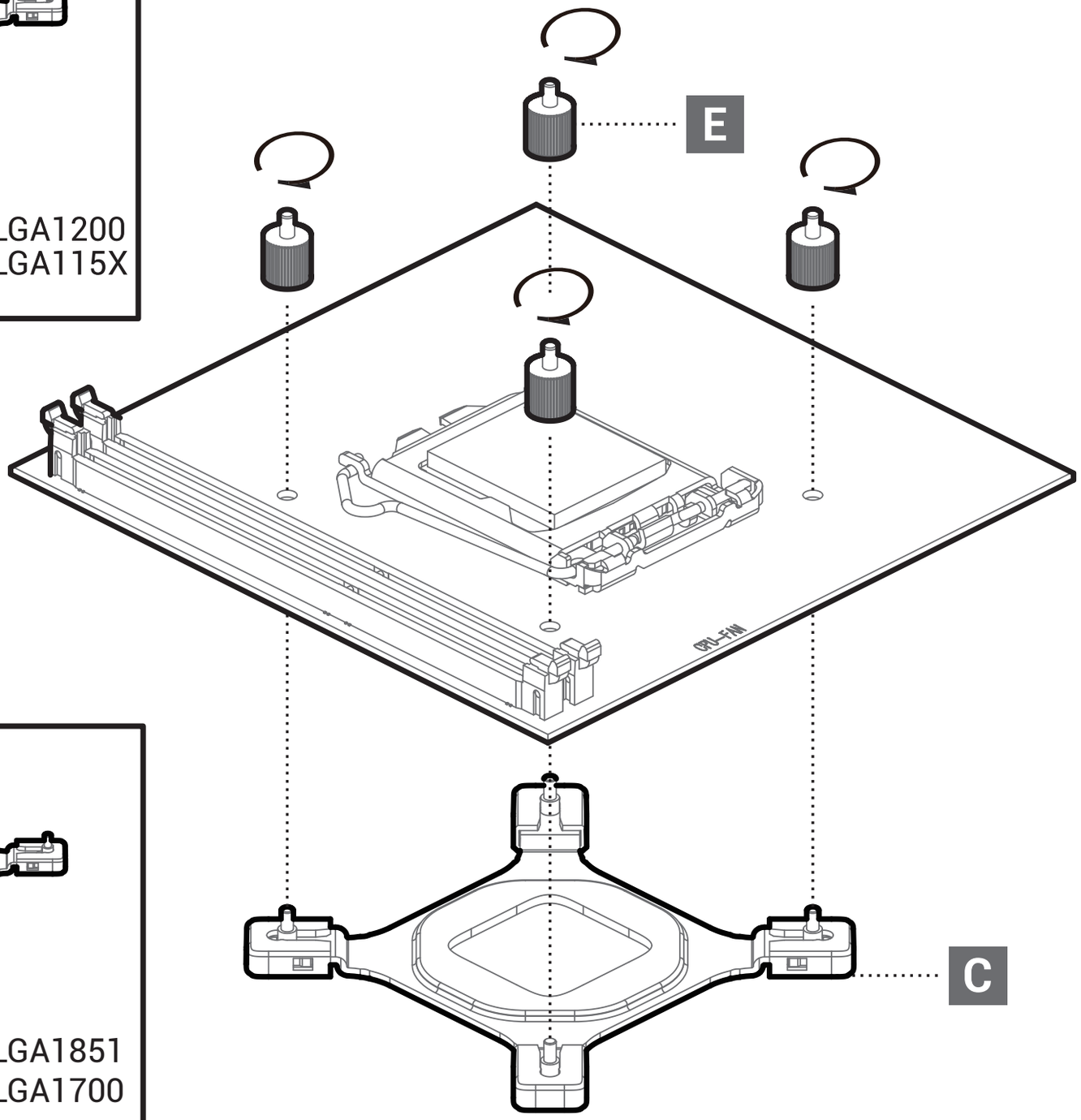

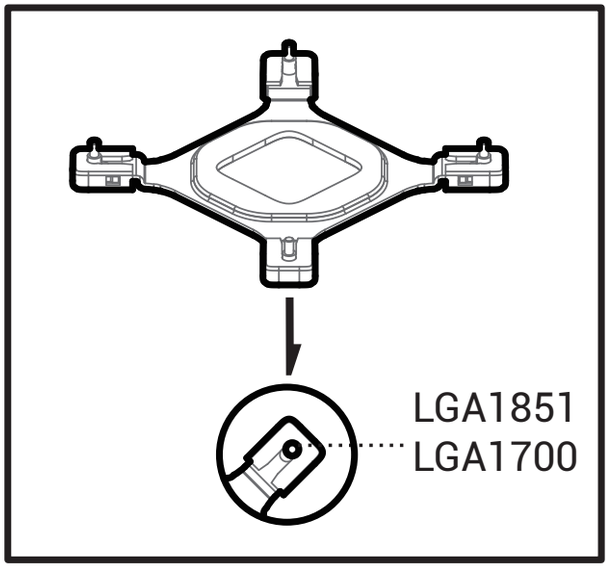

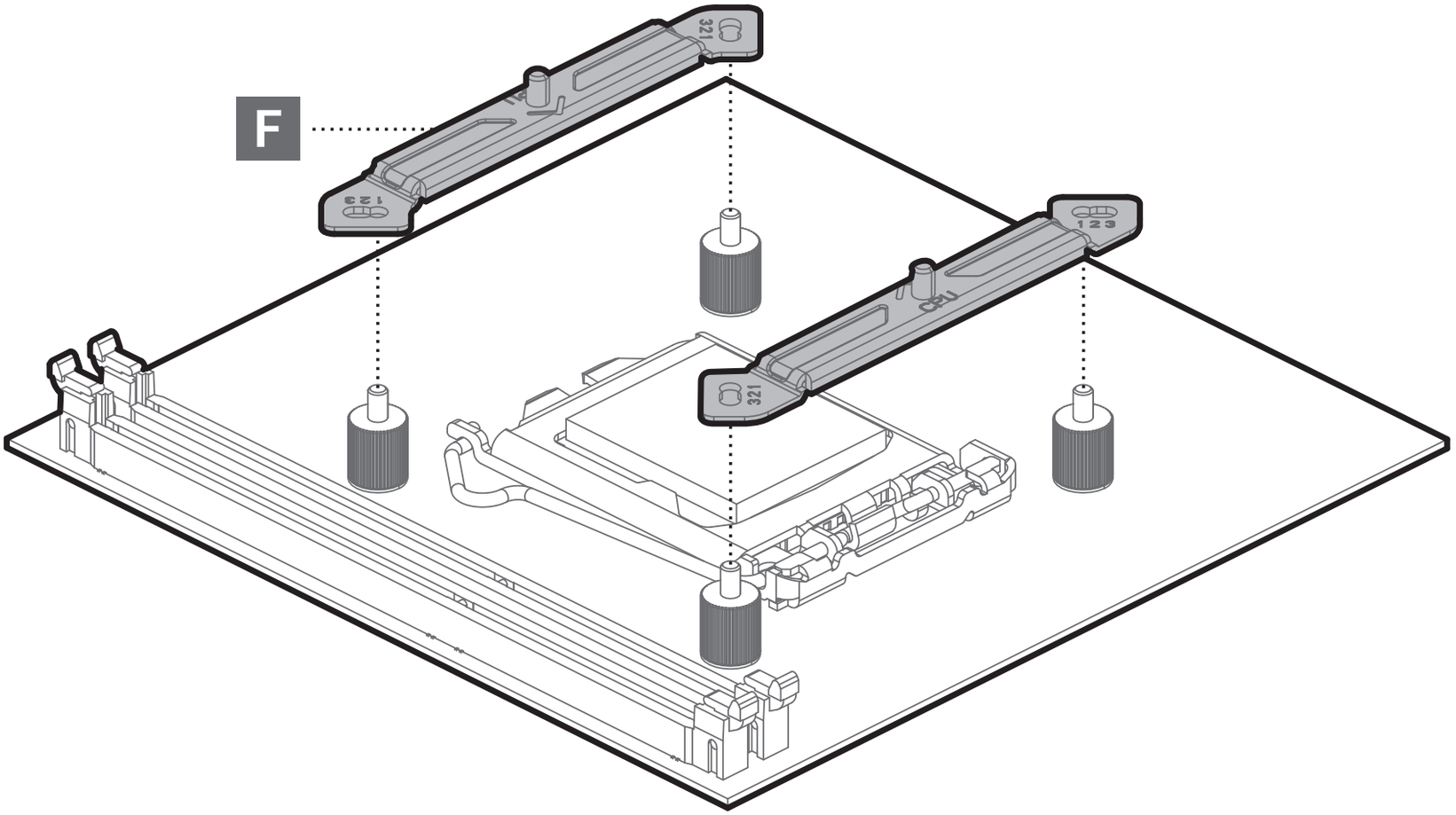
F
321
123
CPU

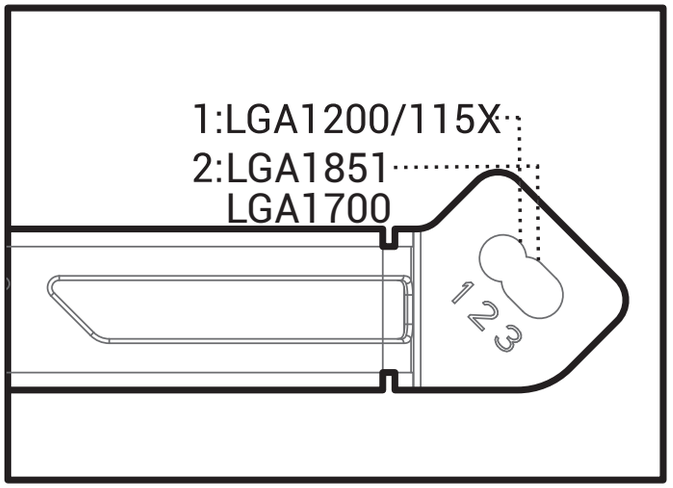
1:LGA1200/115X
2:LGA1851
LGA1700
123

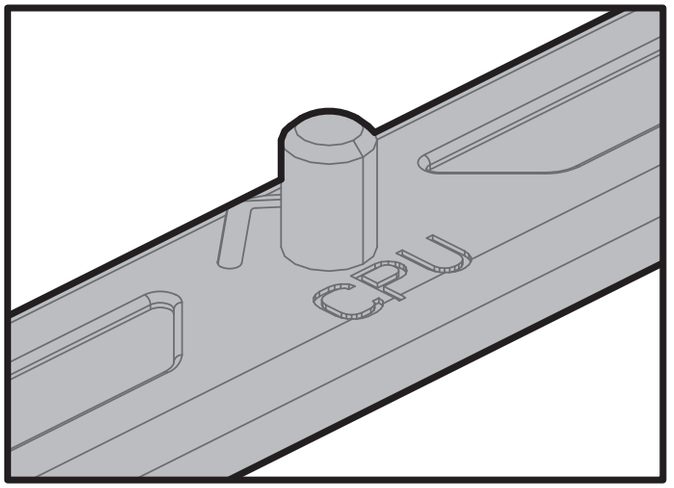
CPU

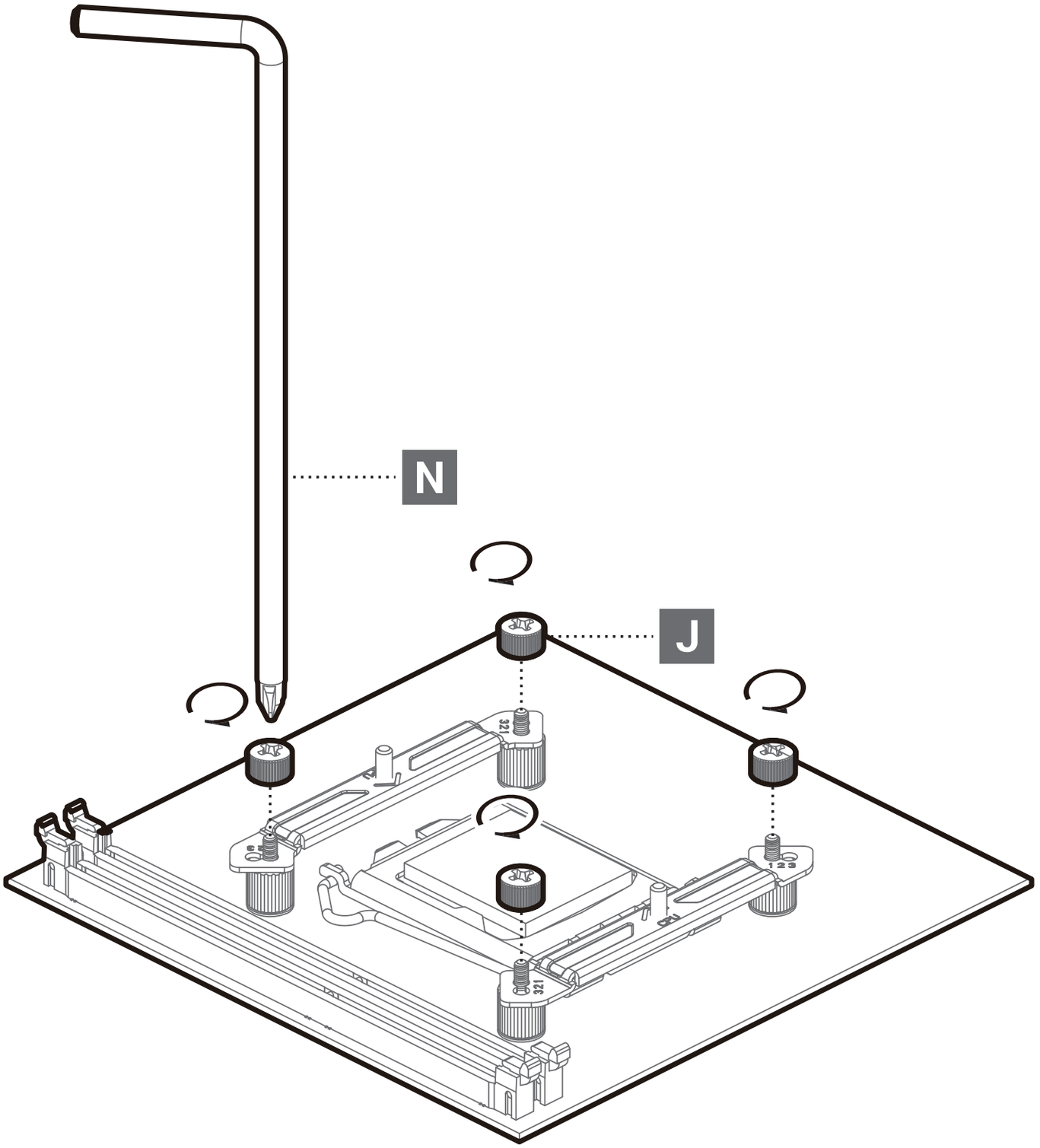
N
J

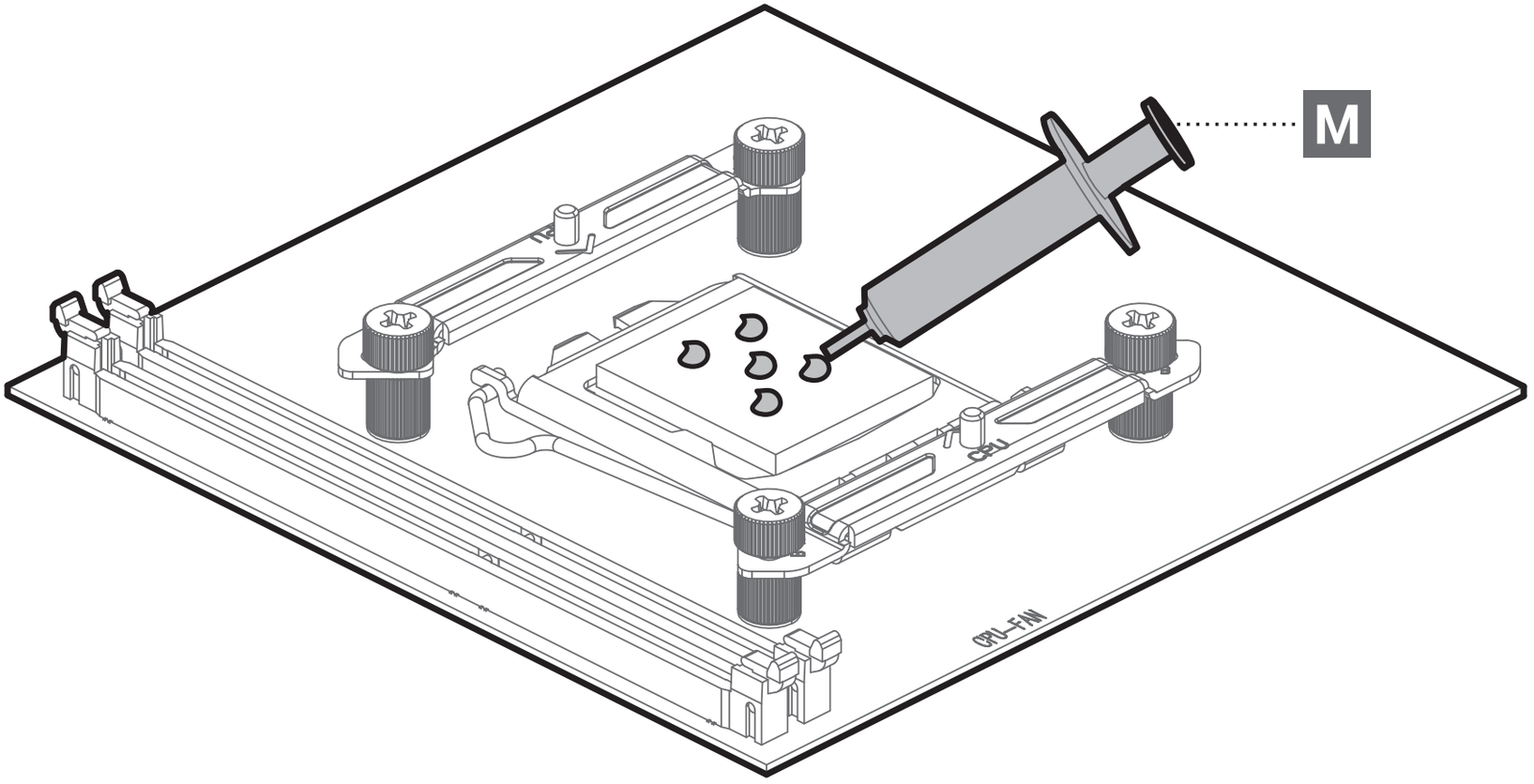
M
CPU
CPU-FAN

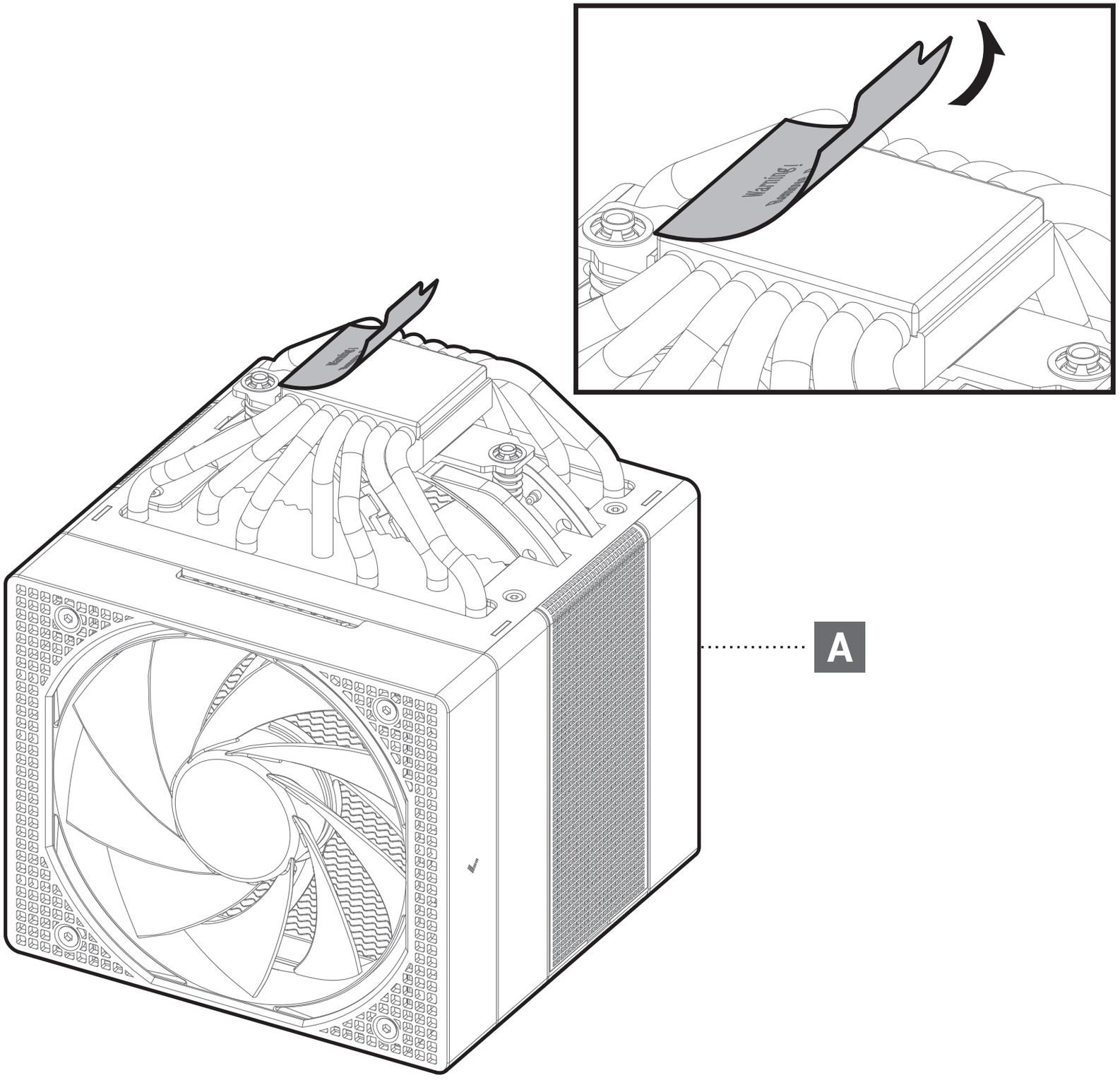
Warning!
Warning!
A

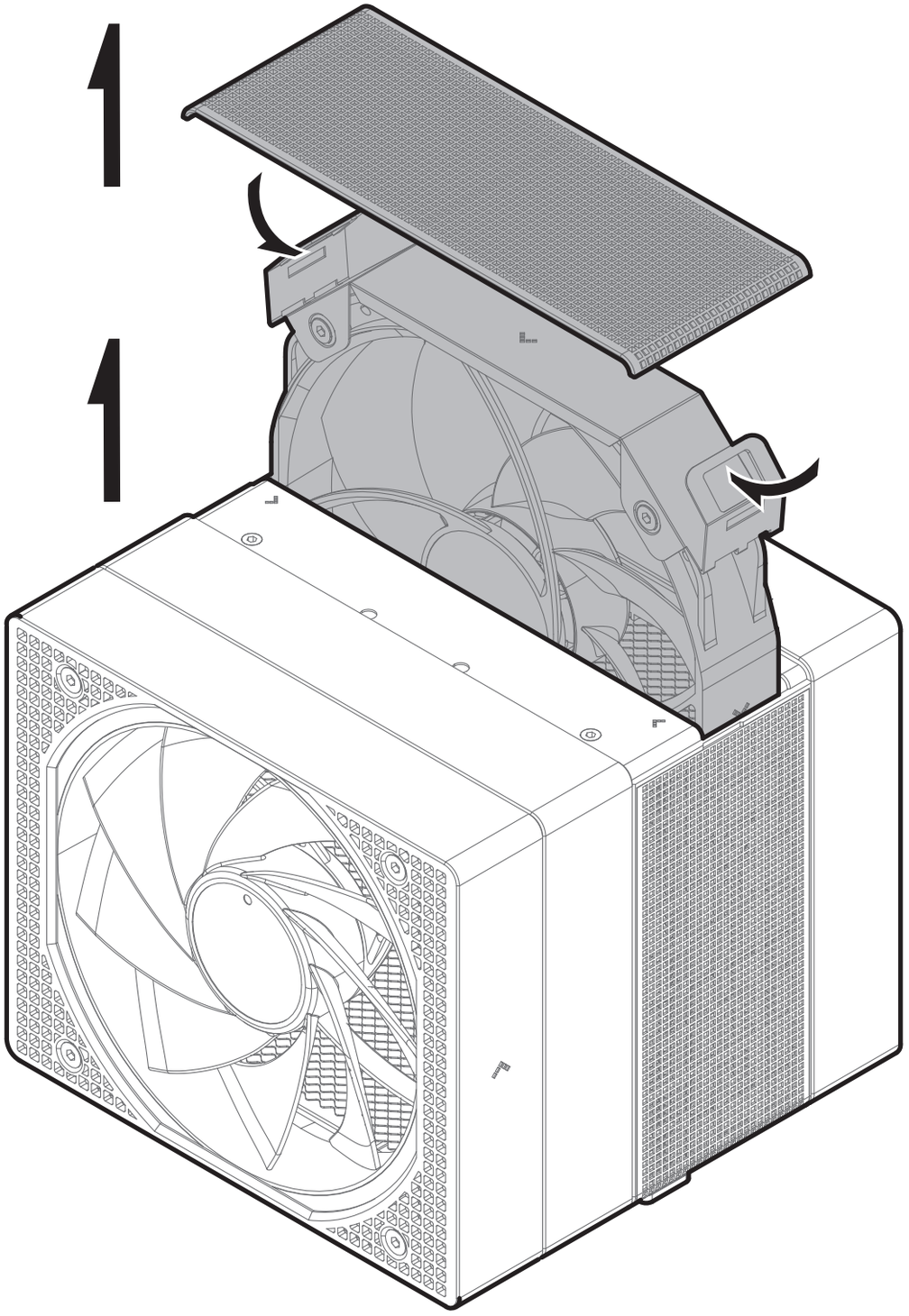
1
1

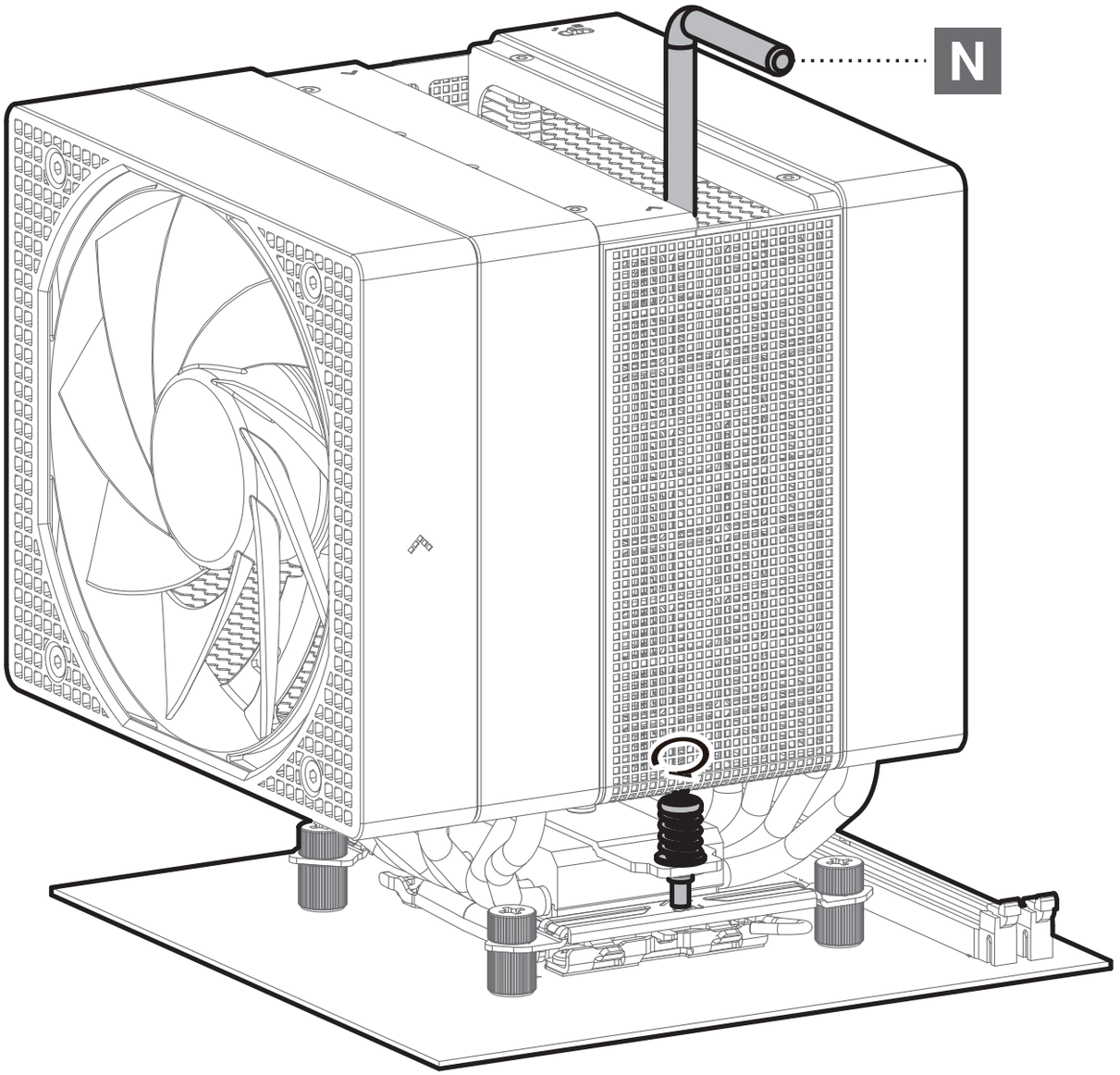
N

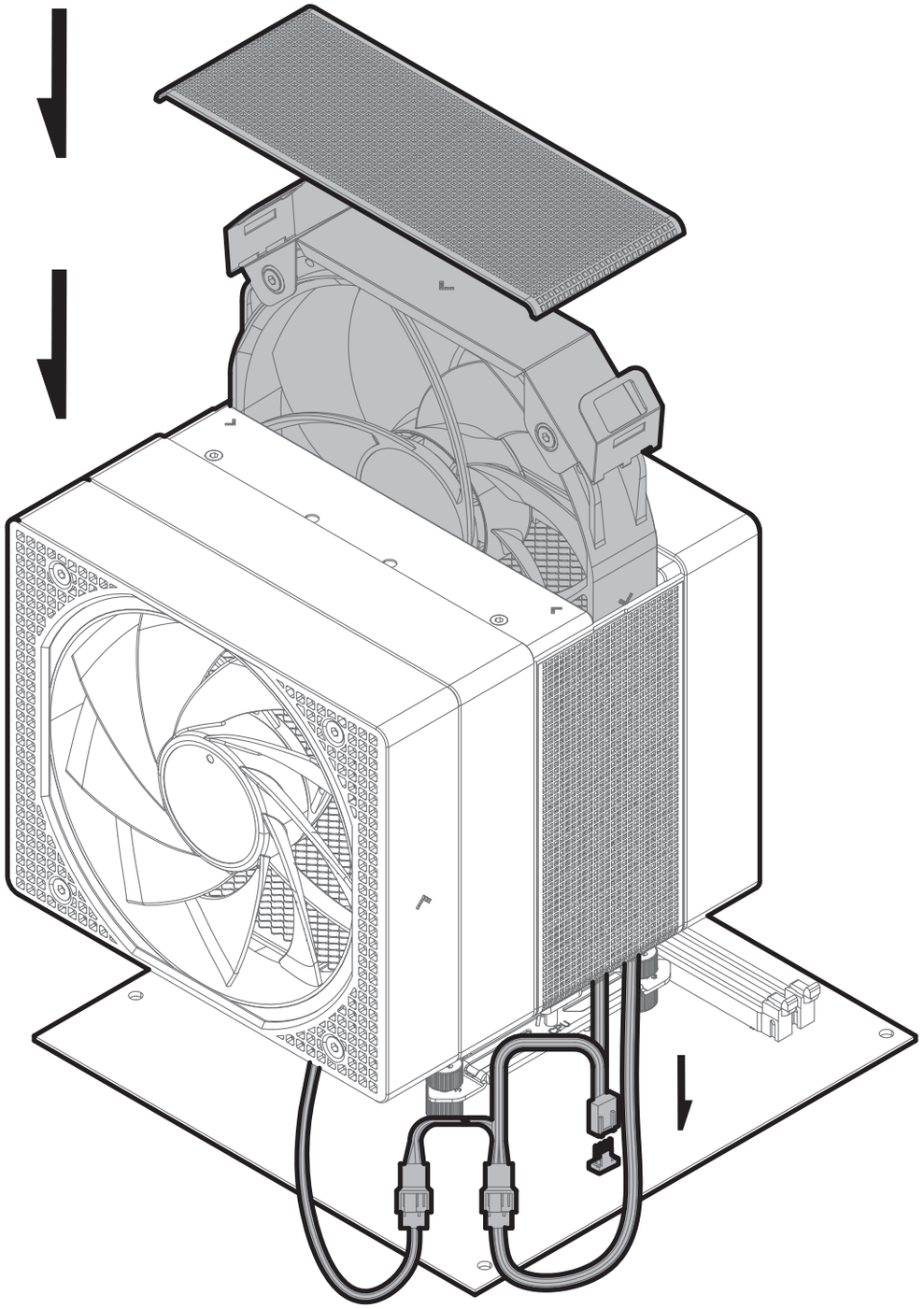

Install the fan while straightening the 4pin wire.

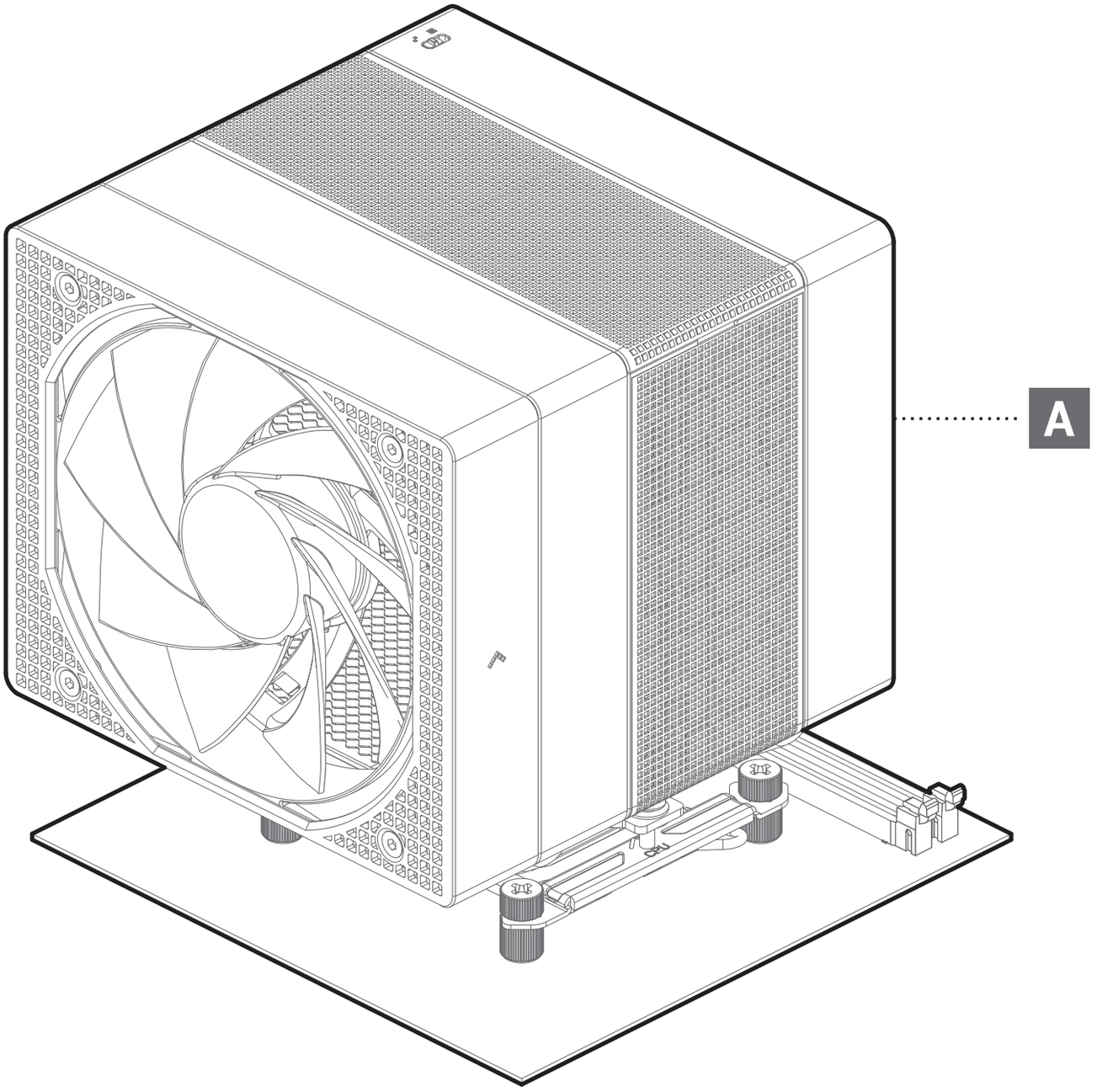

The fan can move up.

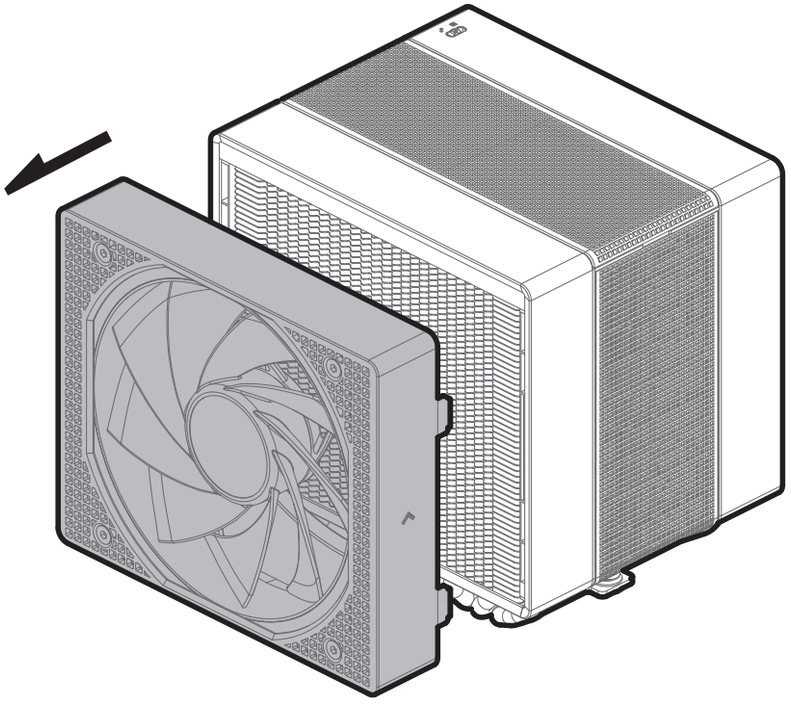

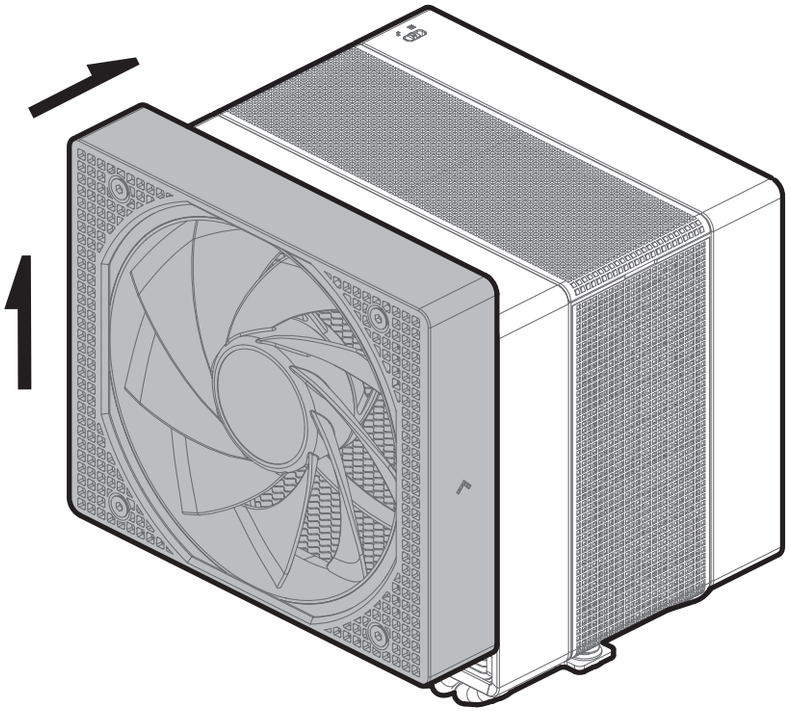

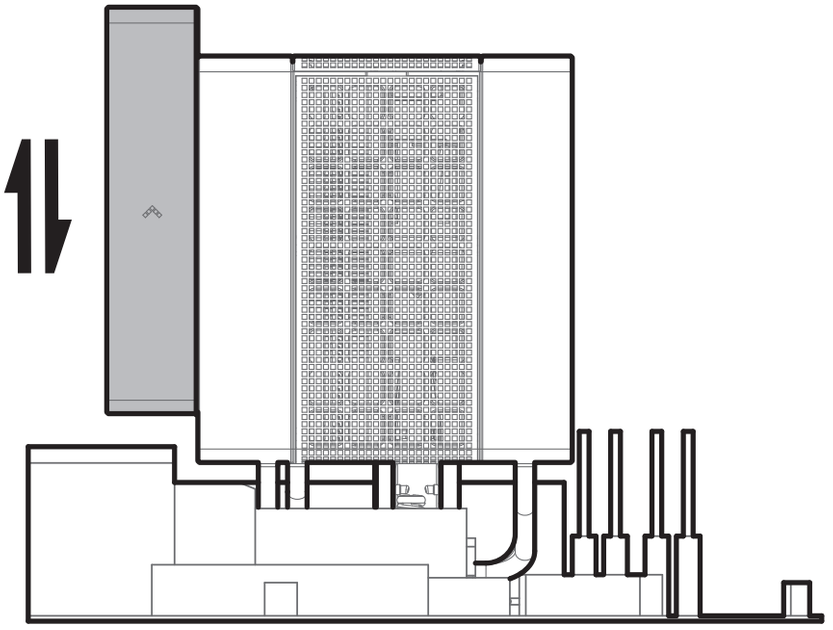

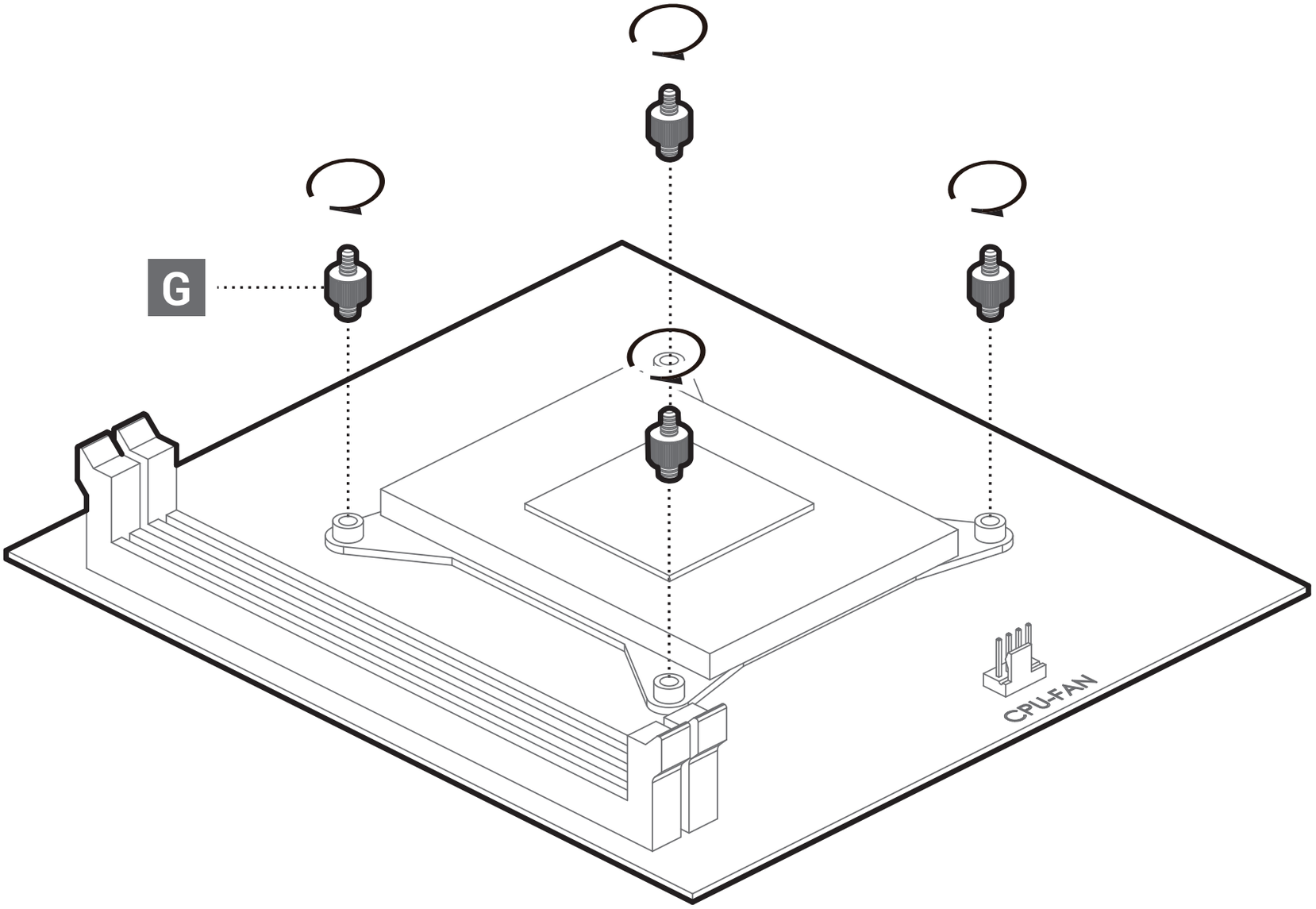
G
CPU-FAN

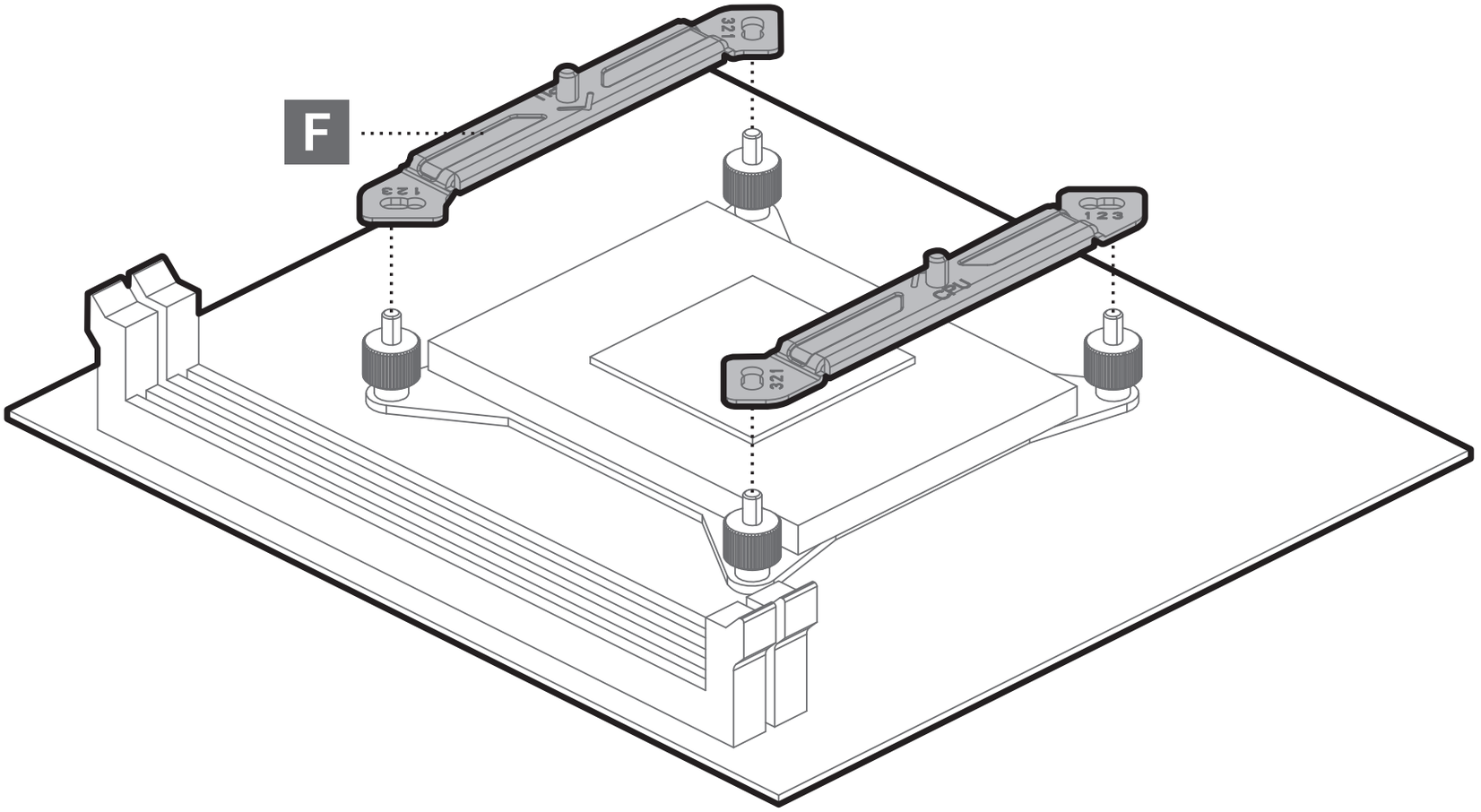
F
CPU

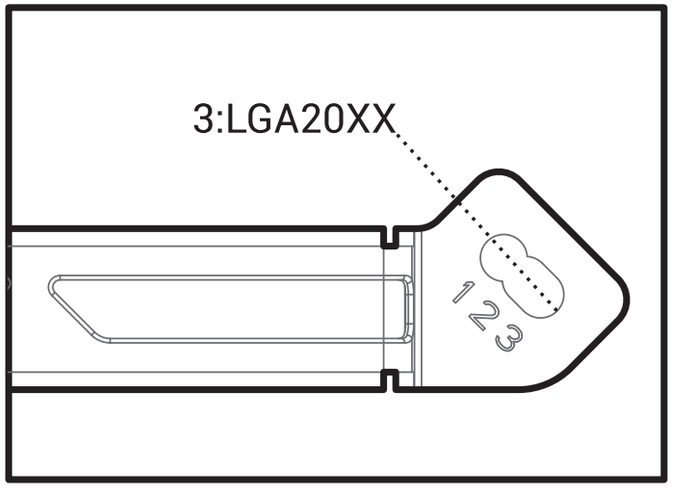
3:LGA20XX

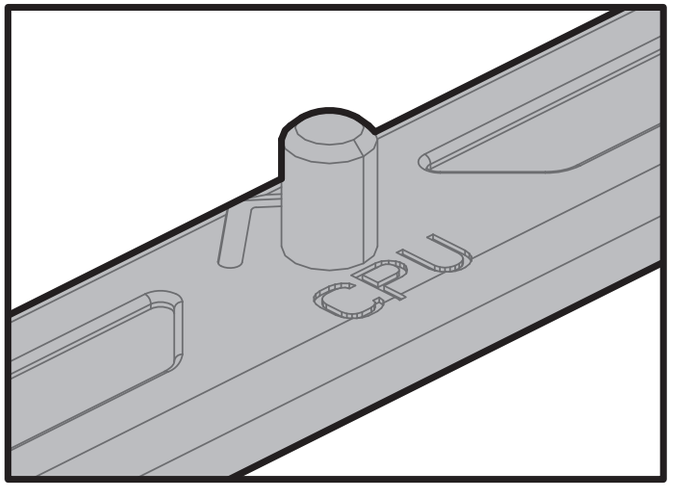
CPU

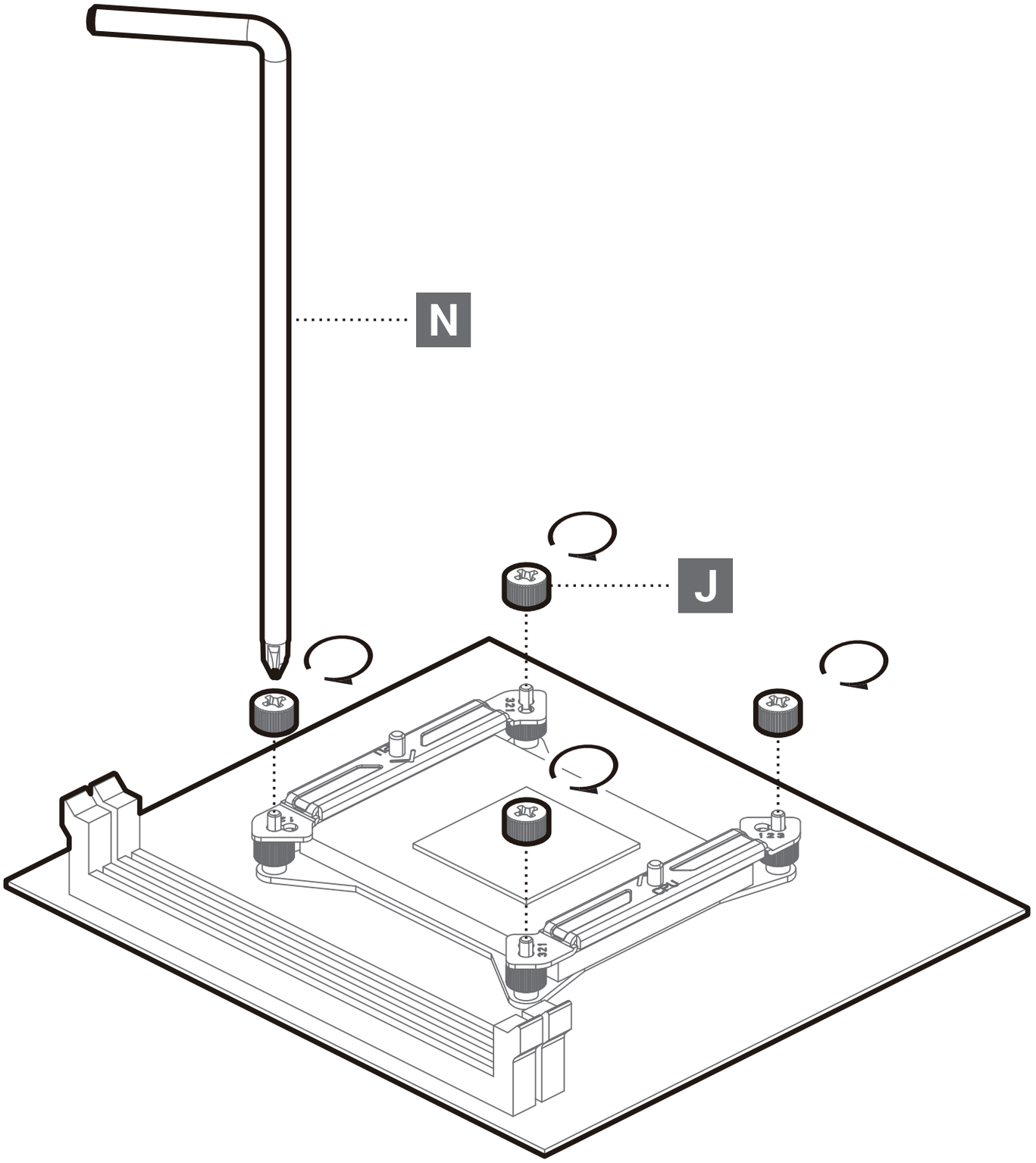
N
J
321
321

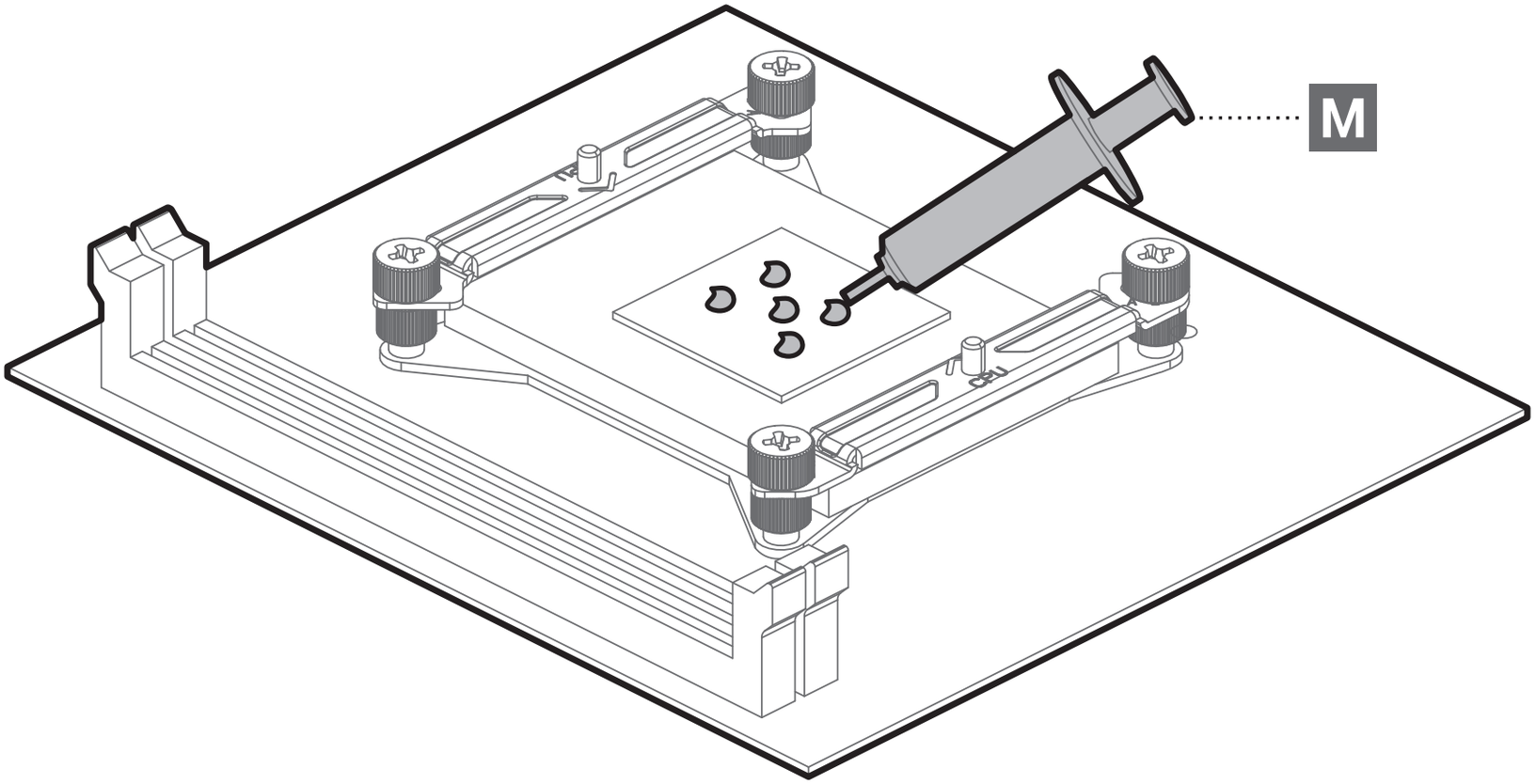
M

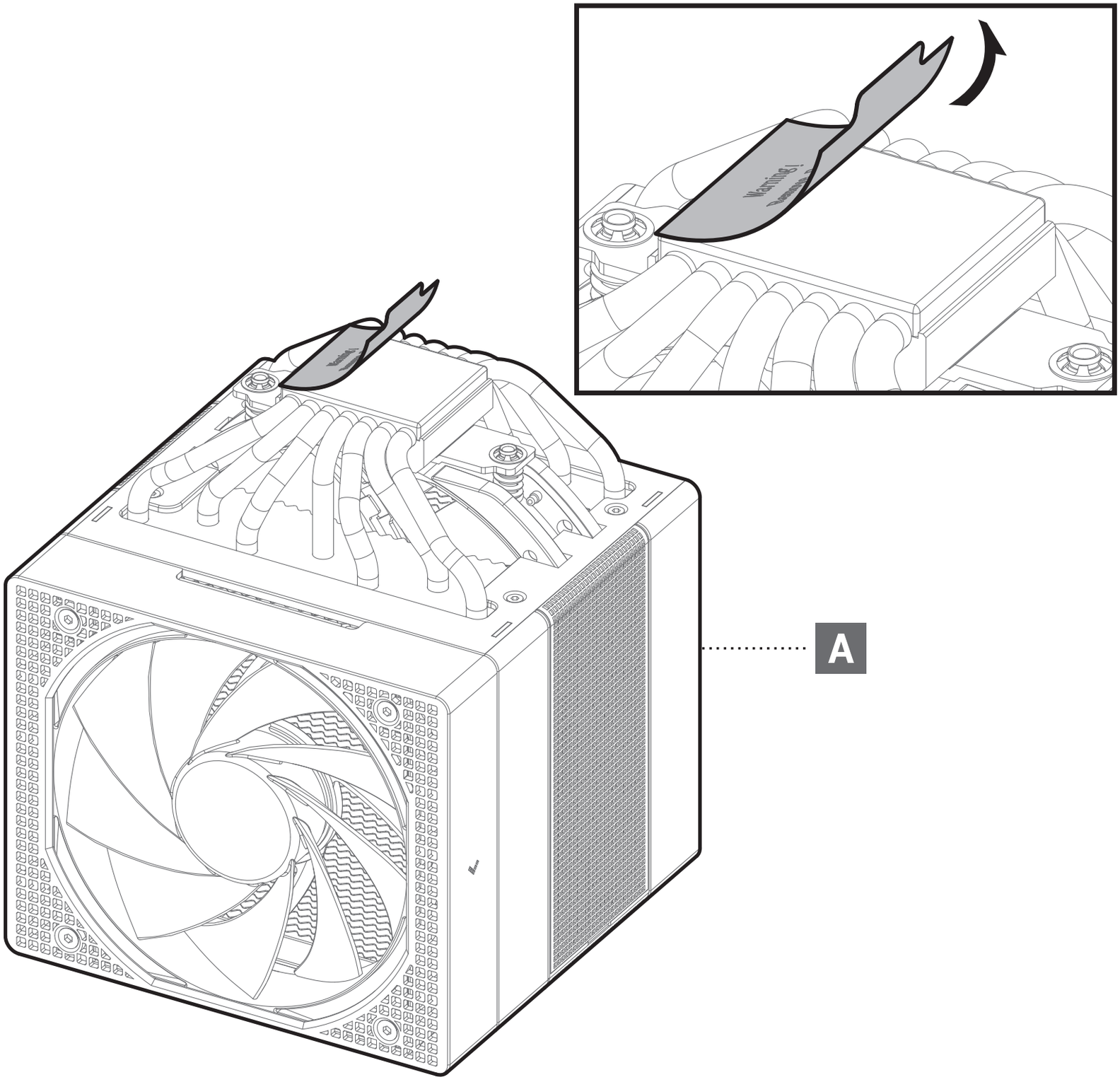
Warning!
Warning!
A

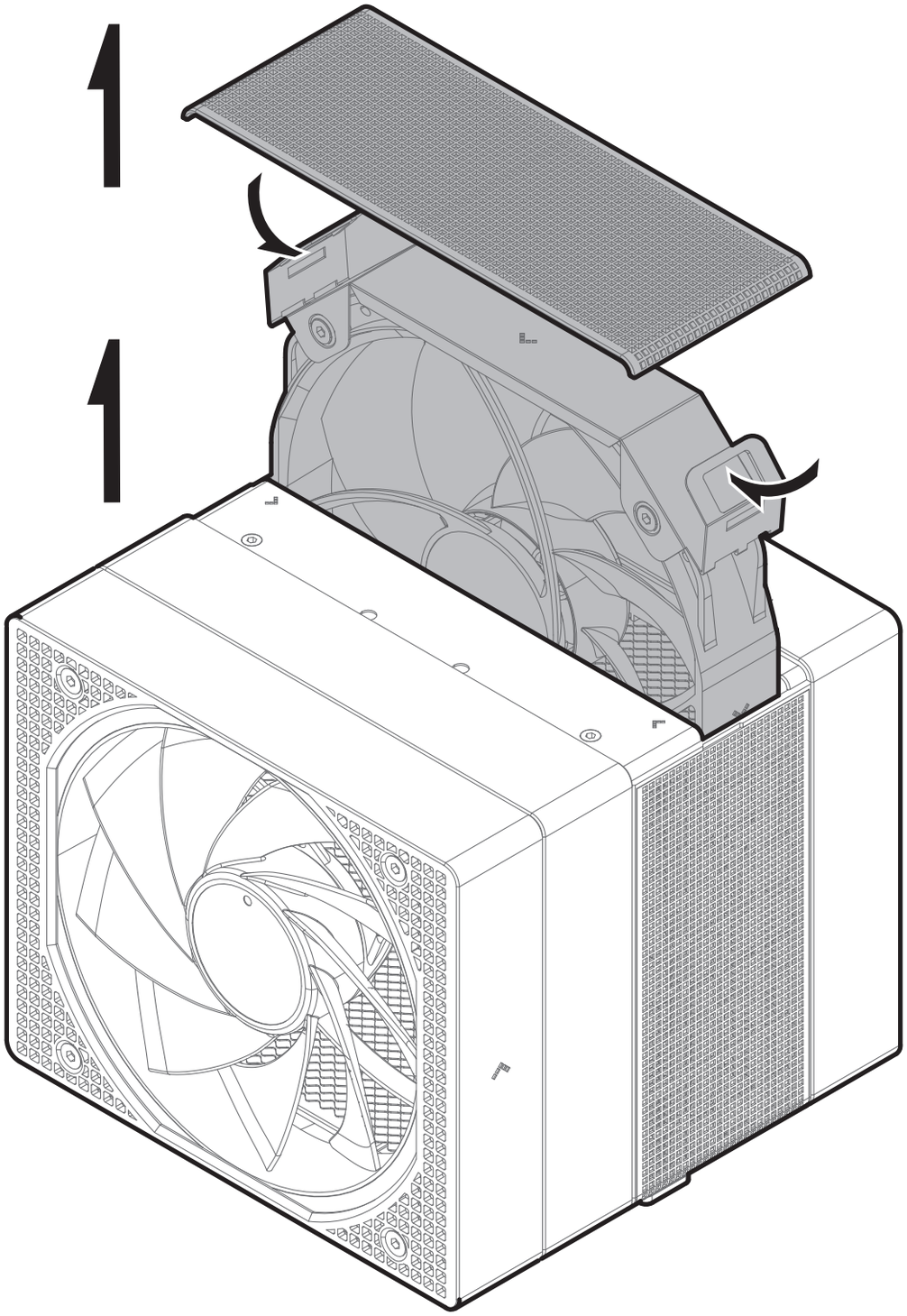
1
1

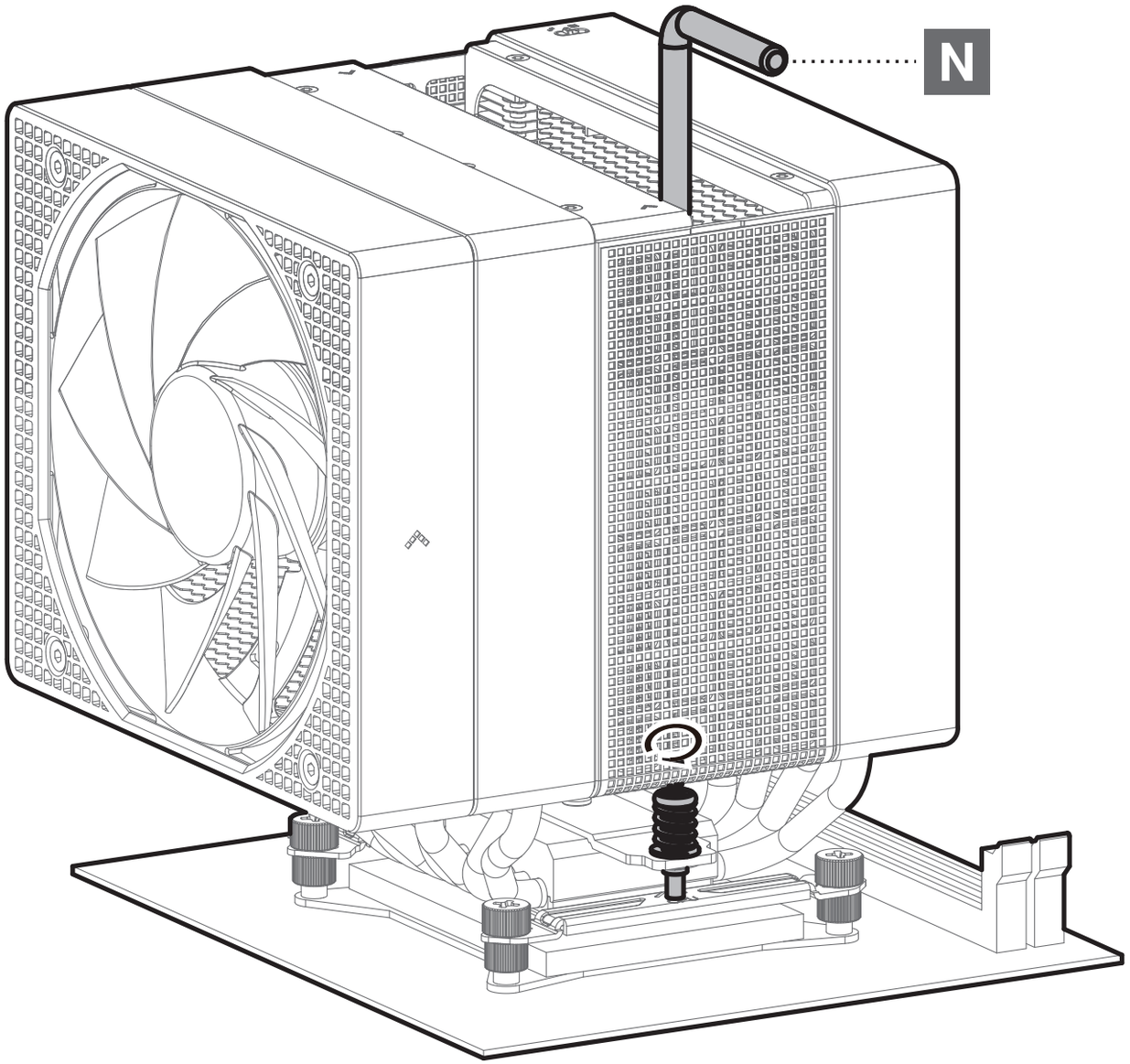
N

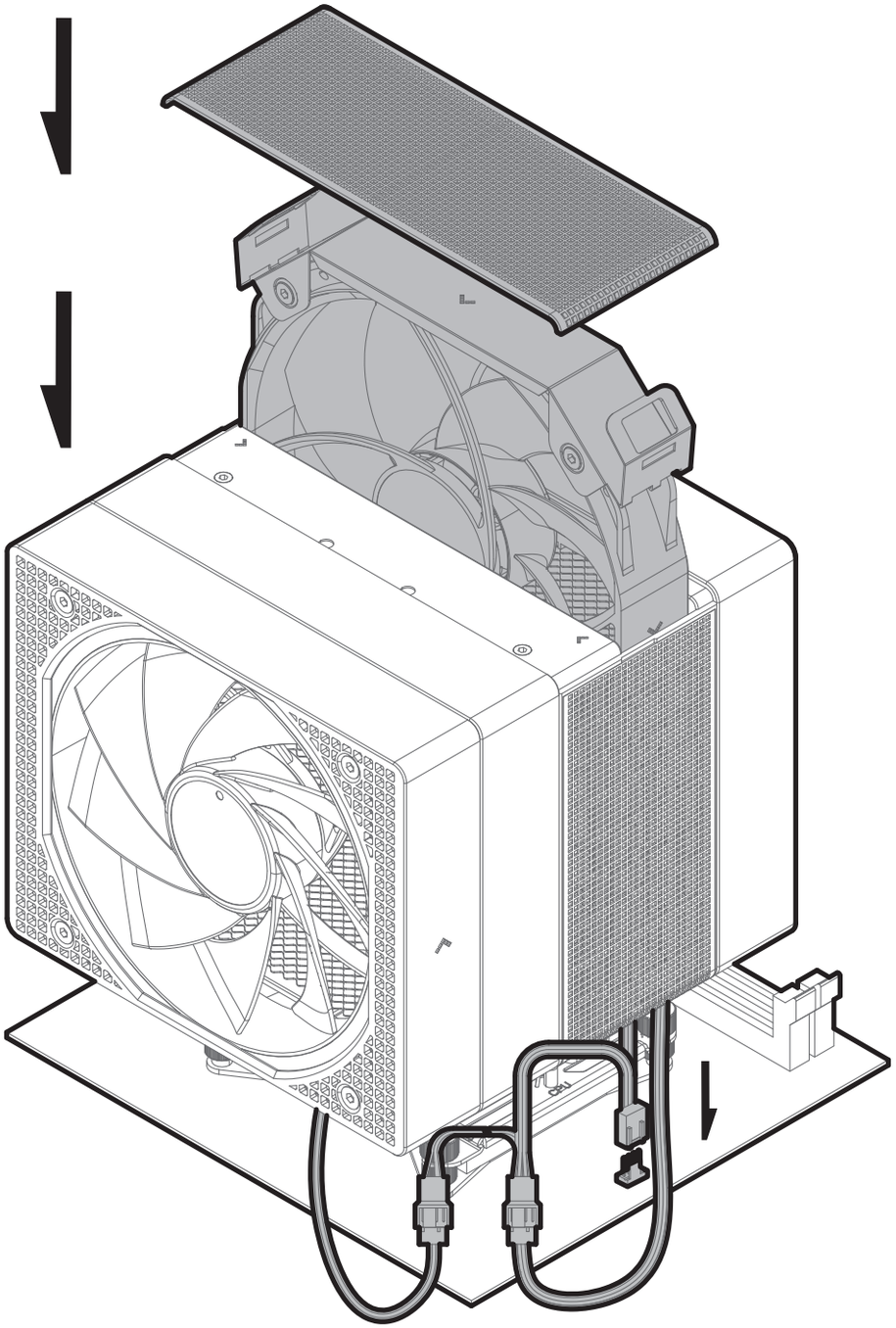

Install the fan while straightening the 4pin wire.

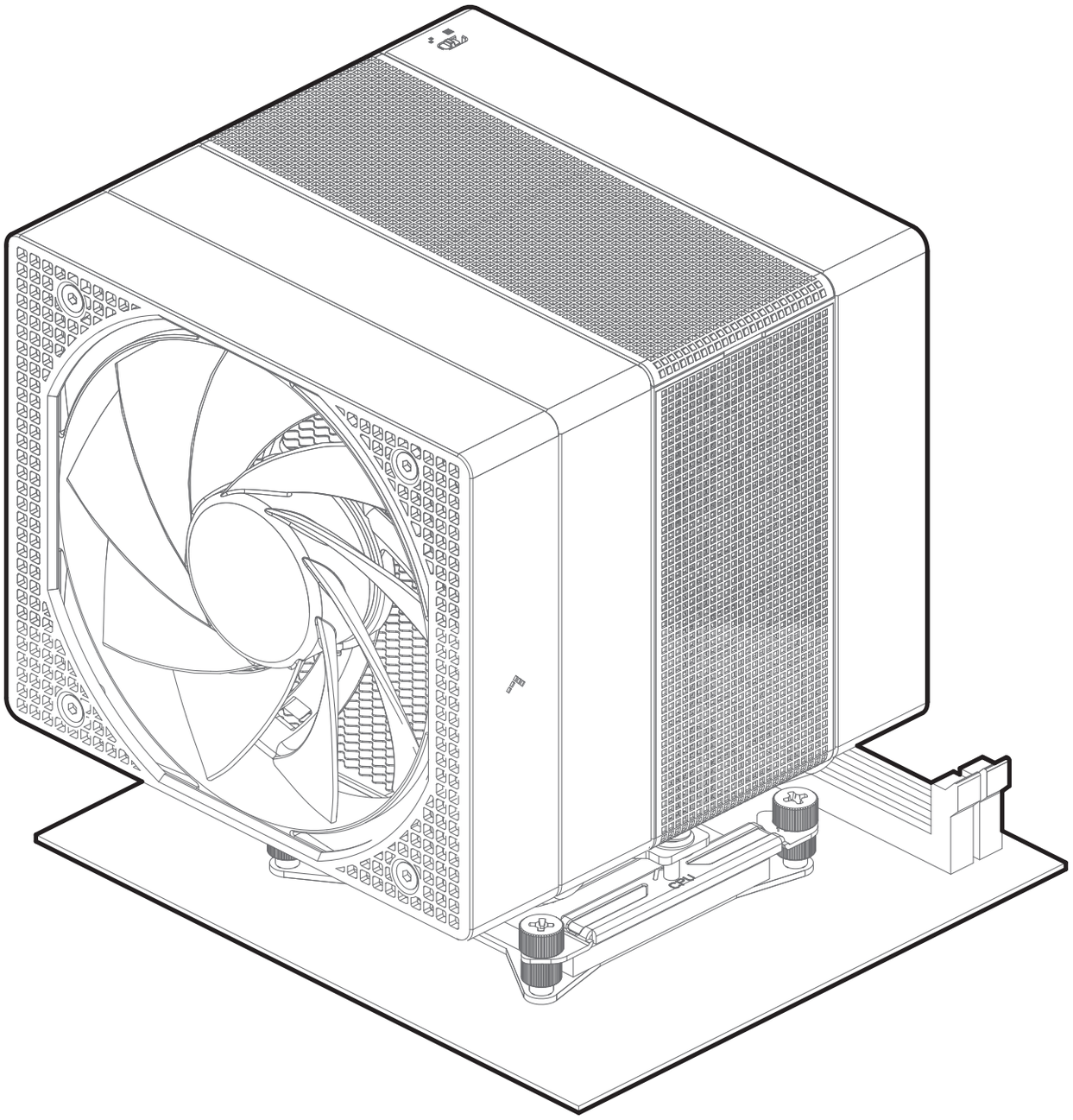

The fan can move up.

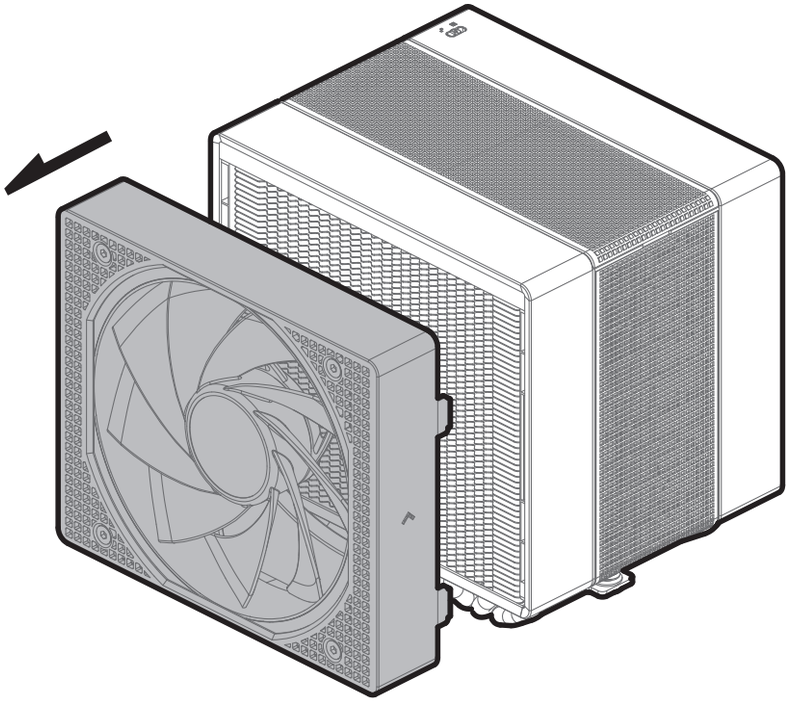

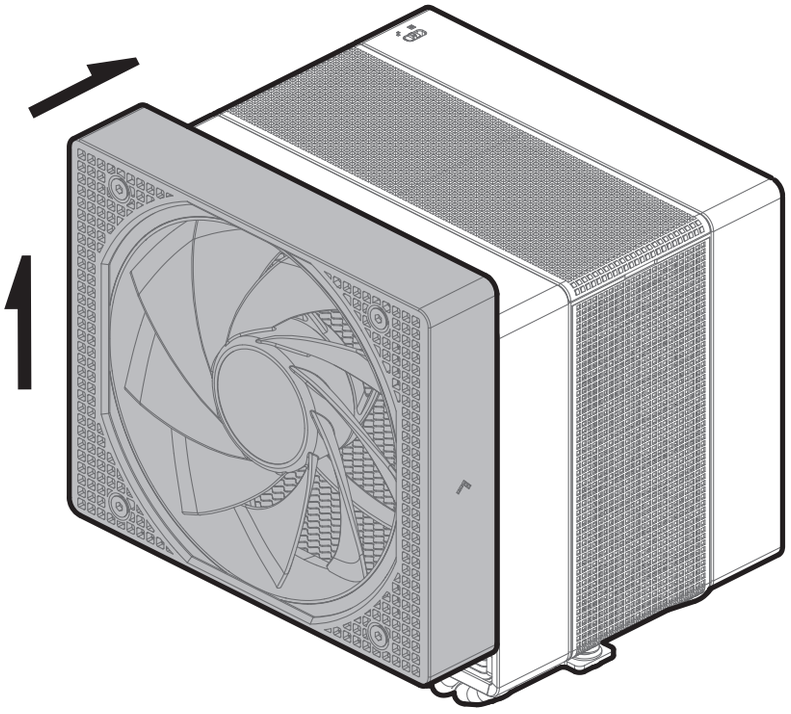

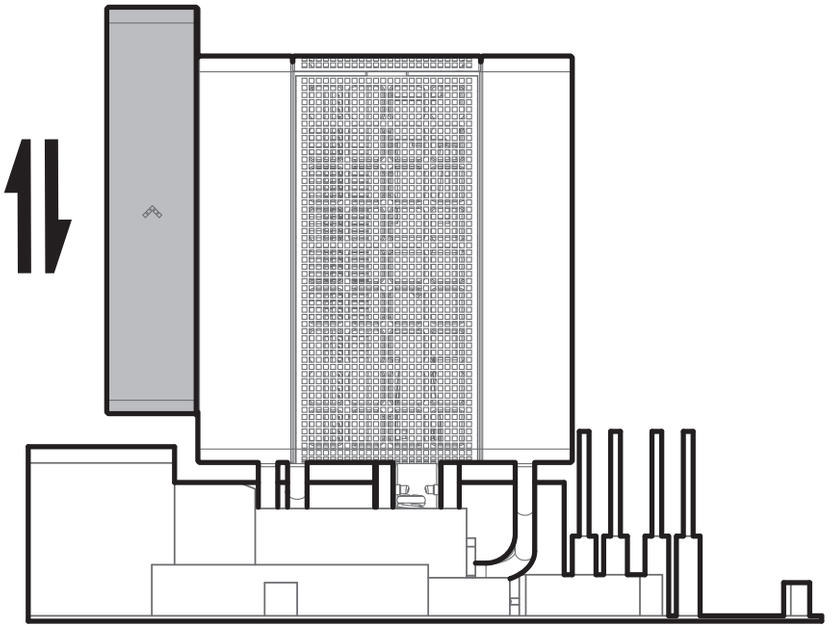

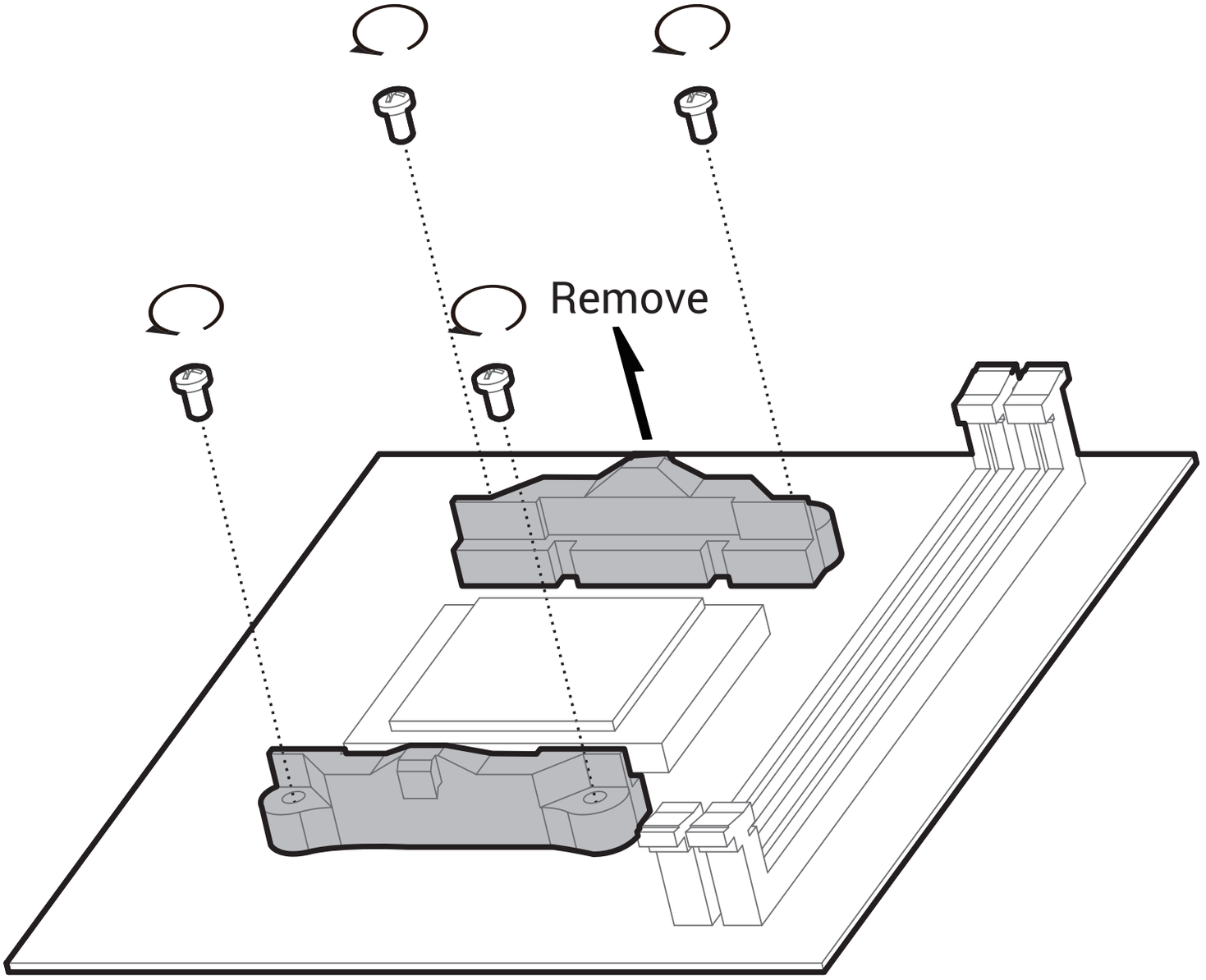
Remove

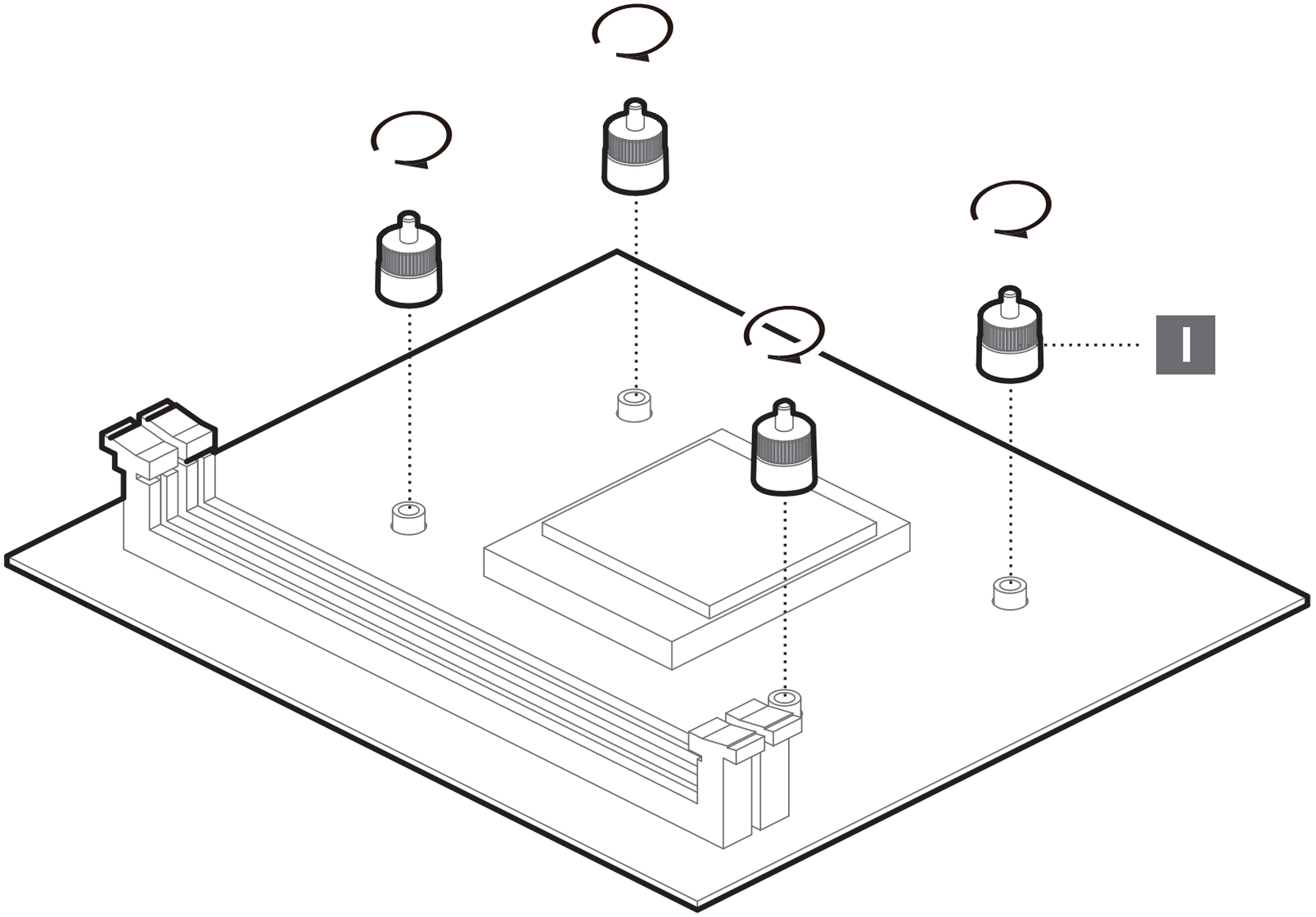
I

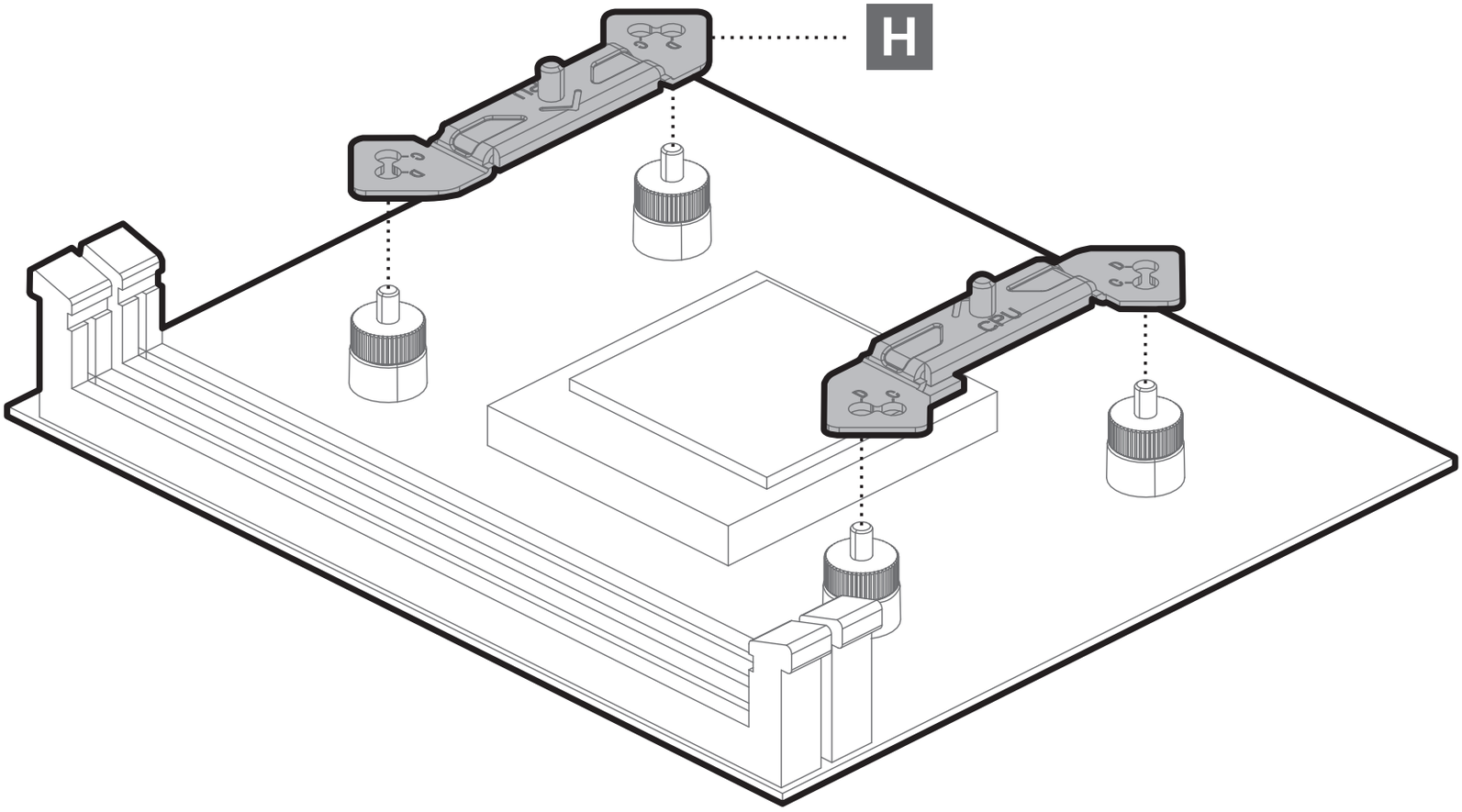
H
CPU

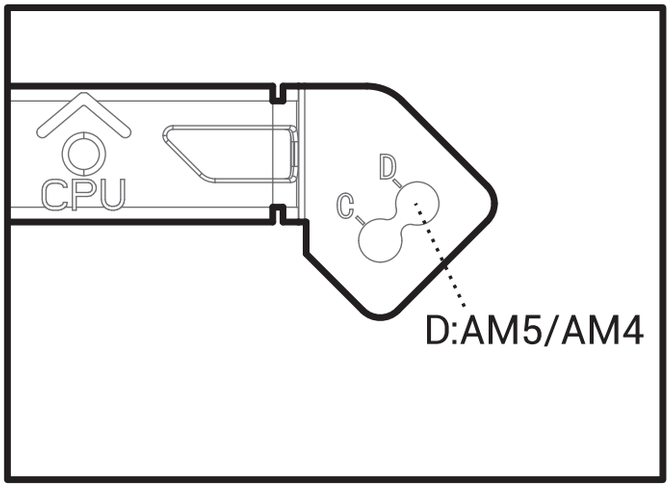
CPU
D
C
D:AM5/AM4

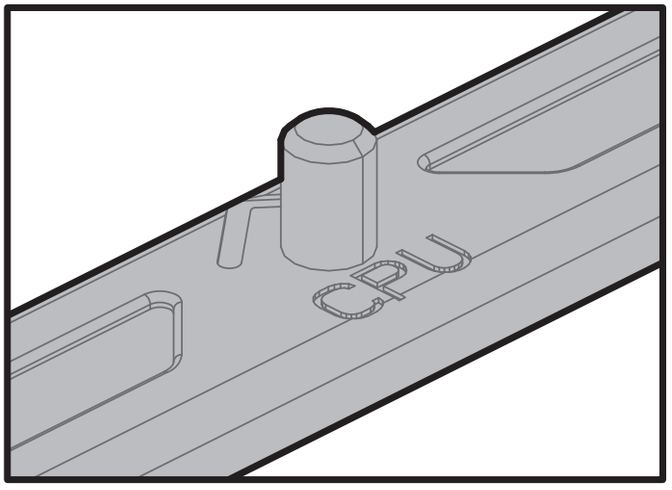
CPU

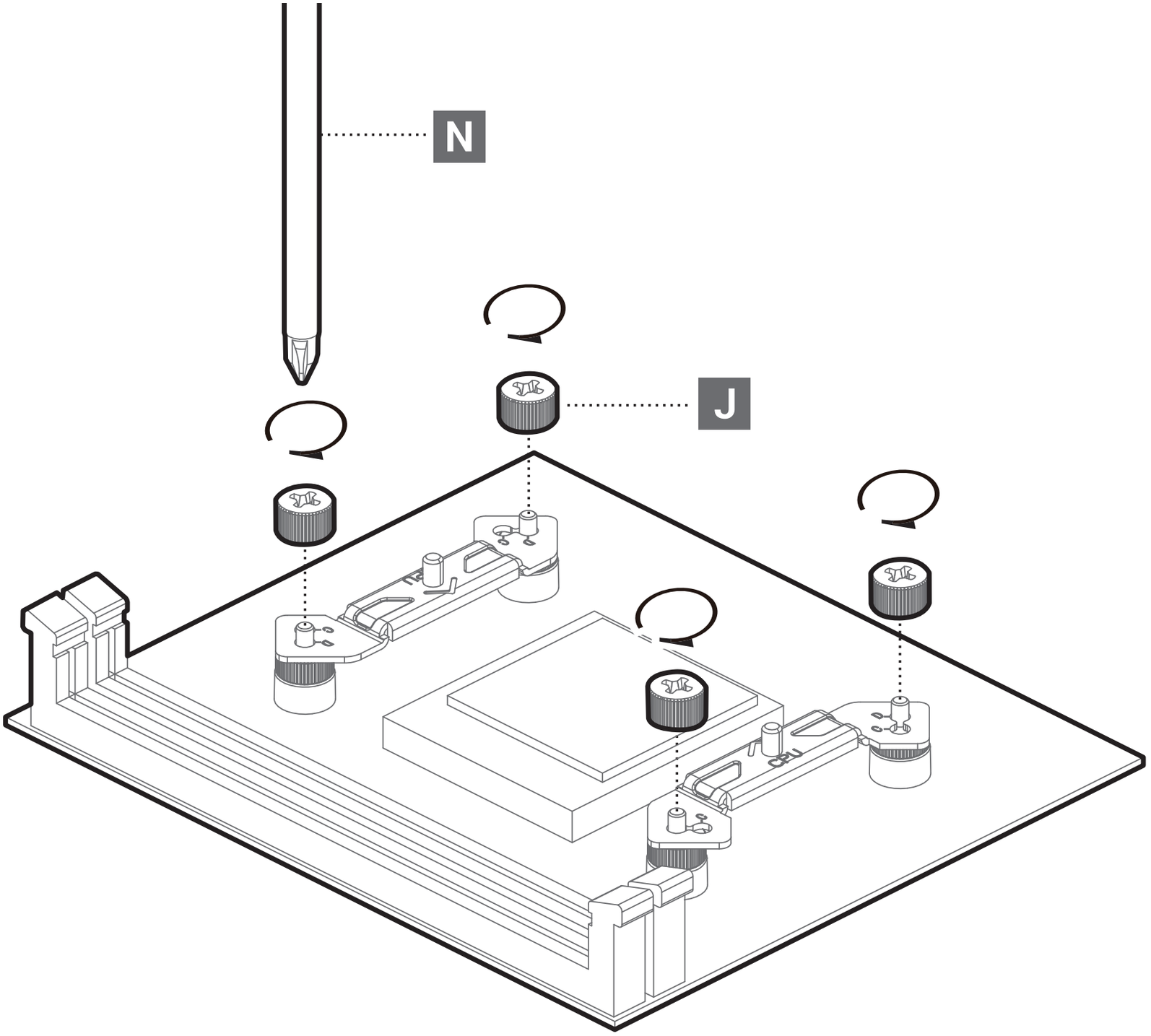
N
J
CPU

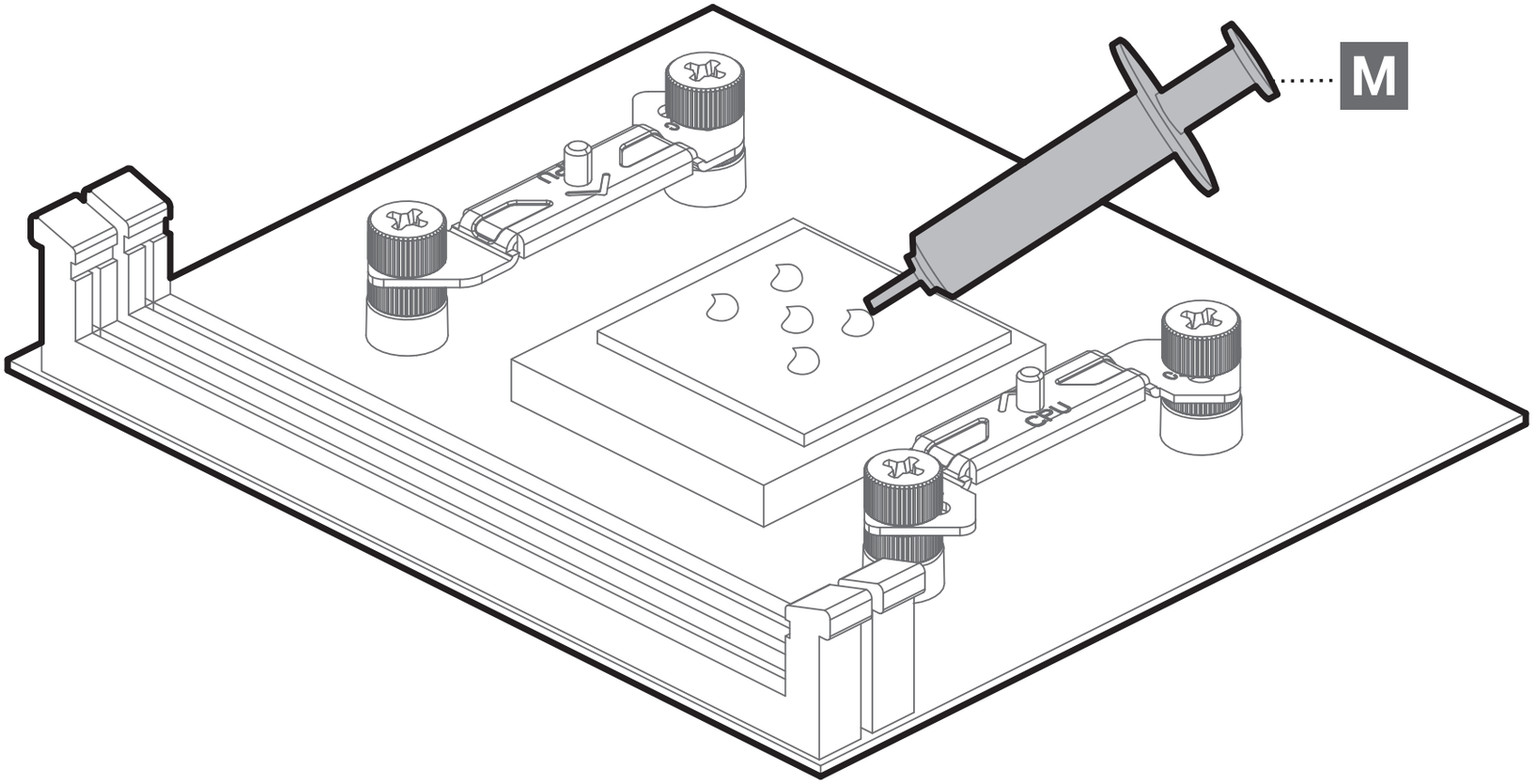
M
CPU

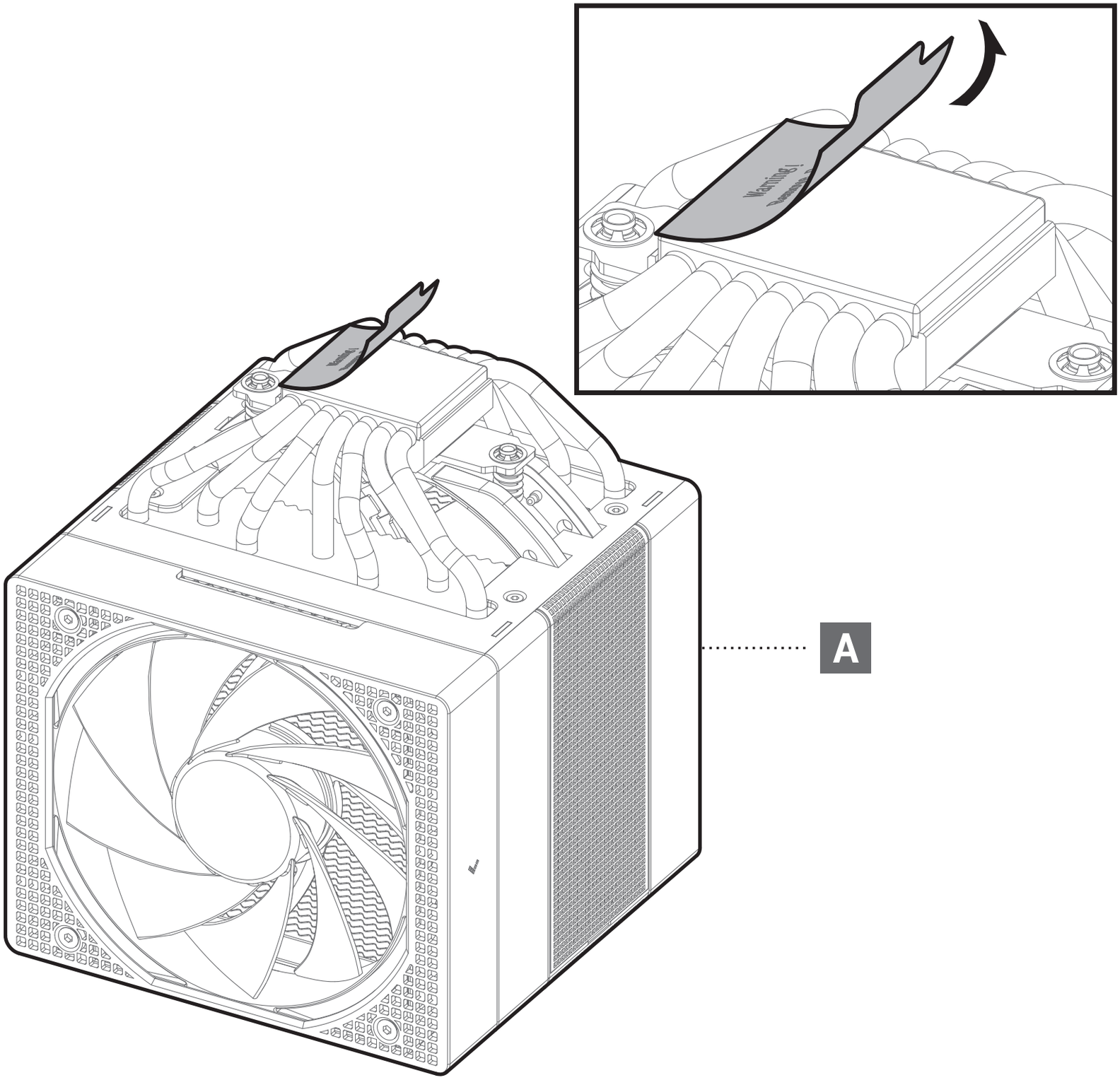
Warning!
Warning!
A

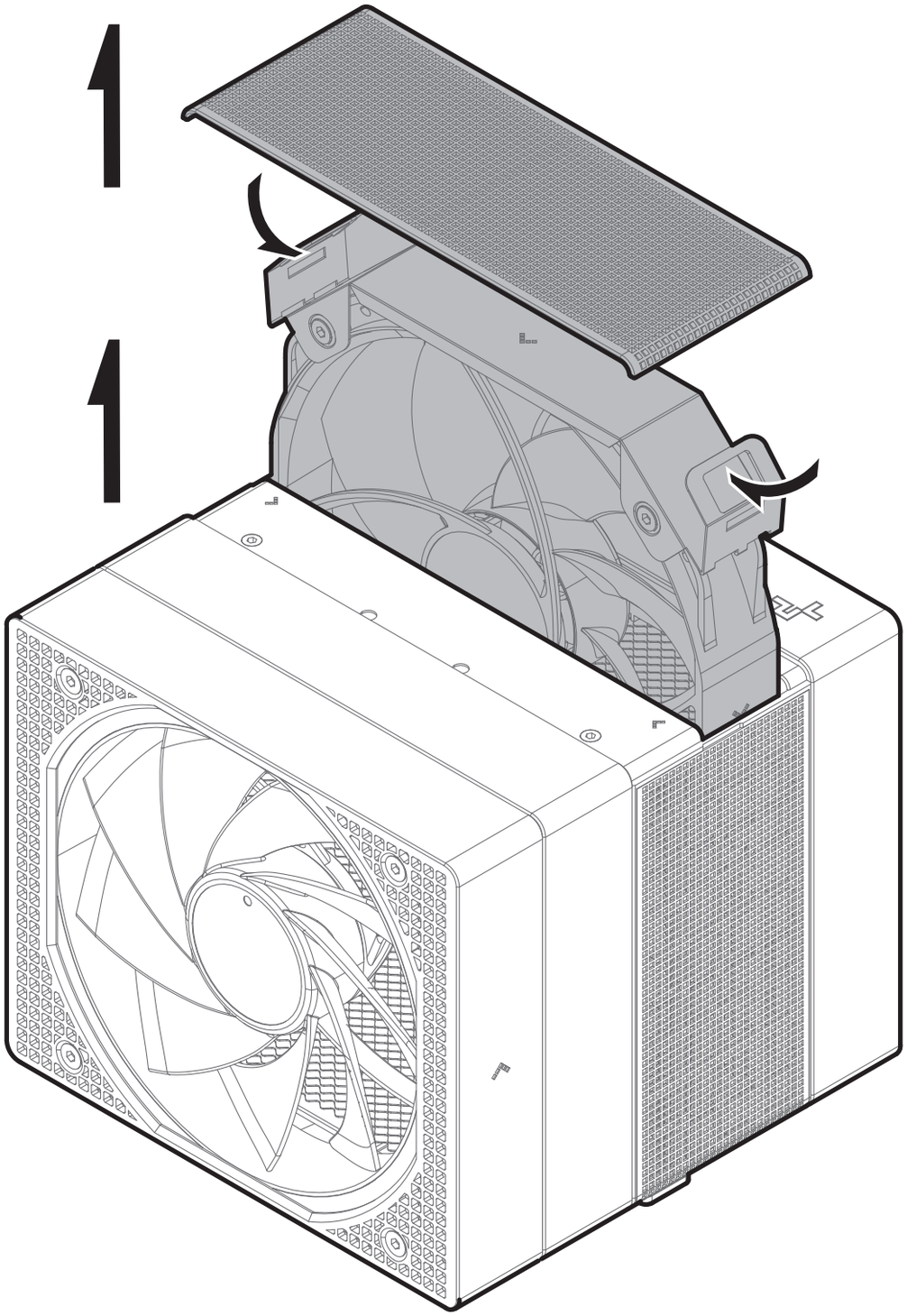
1
1

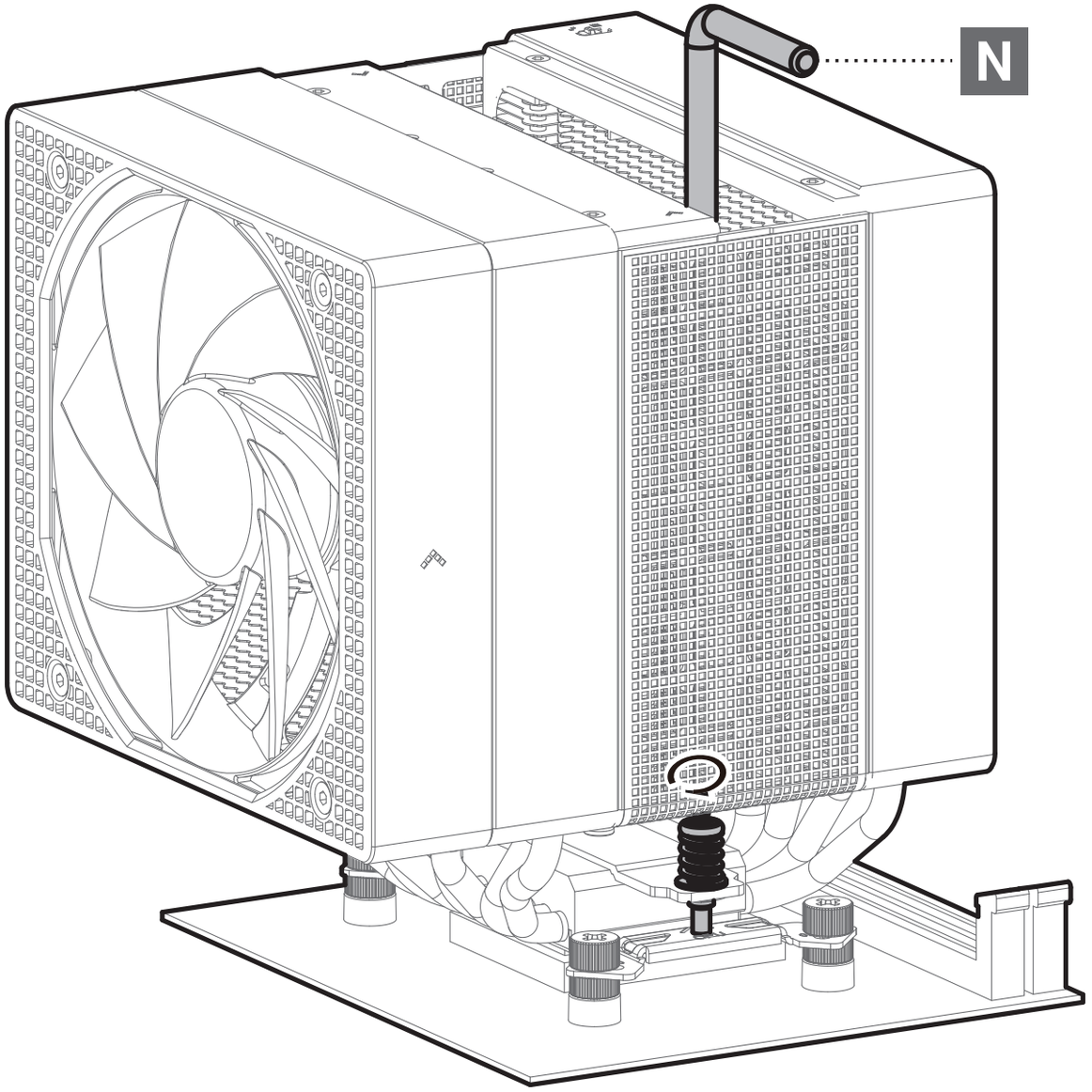
N

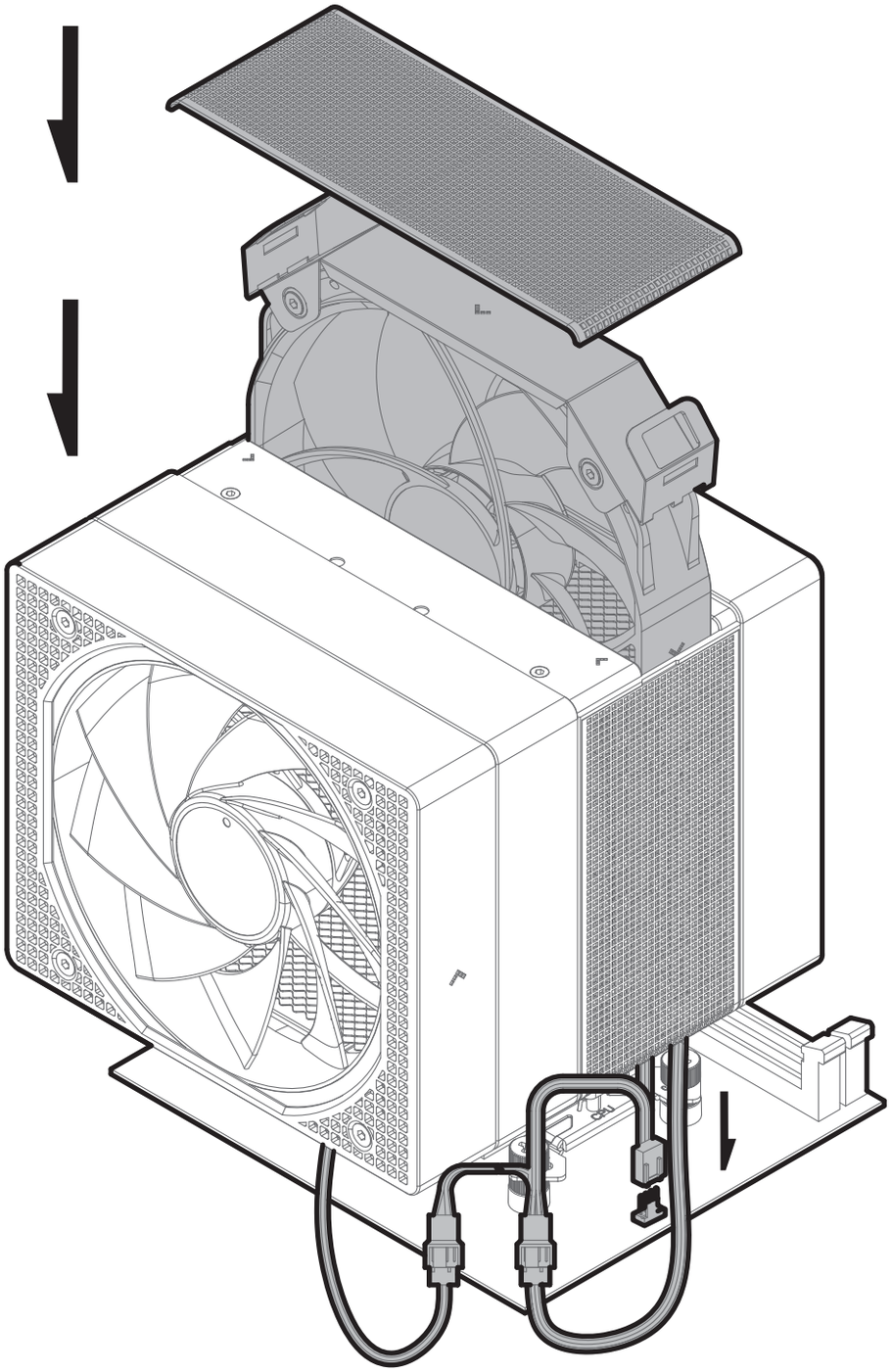

Install the fan while straightening the 4pin wire.

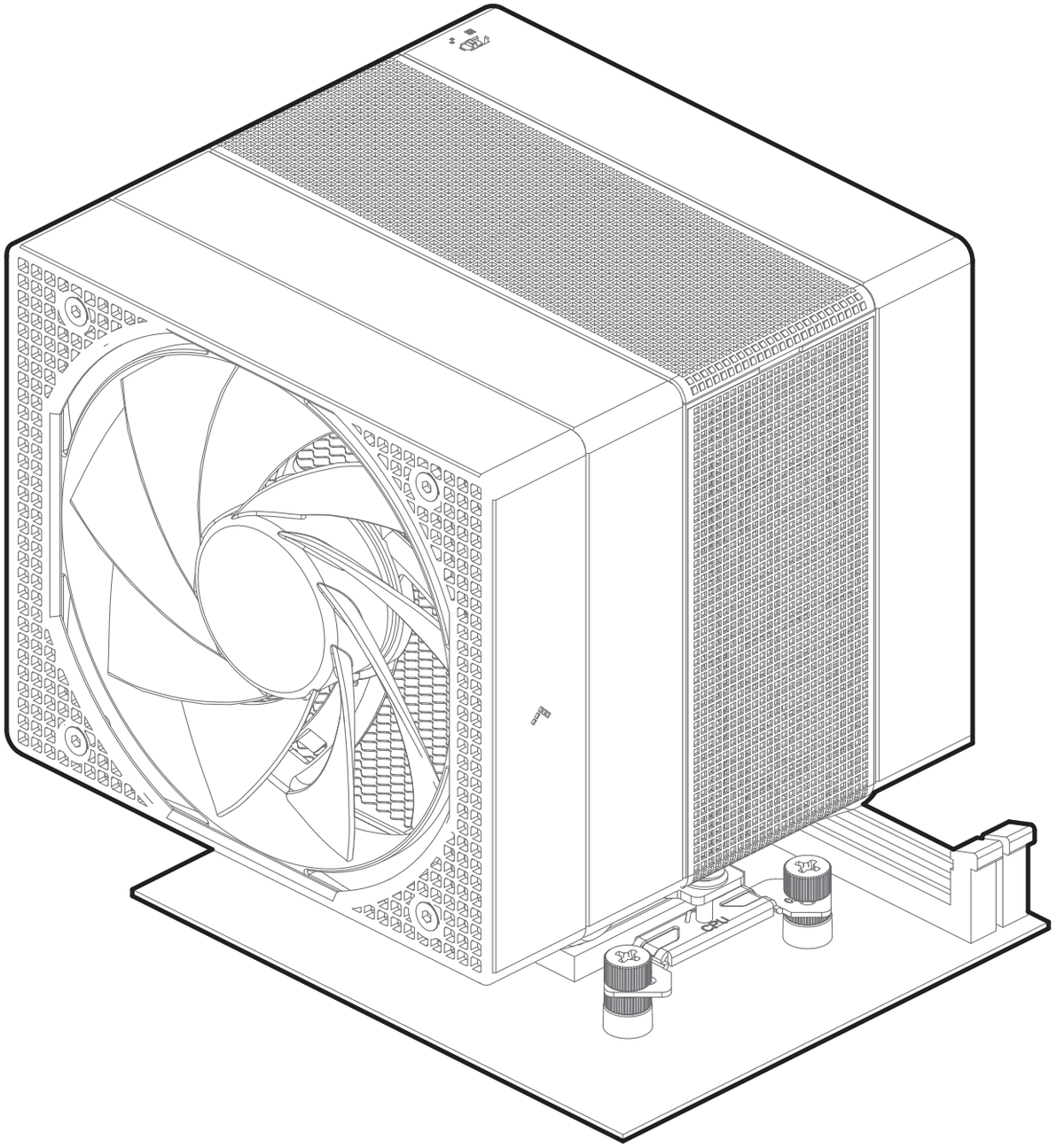

The fan can move up.

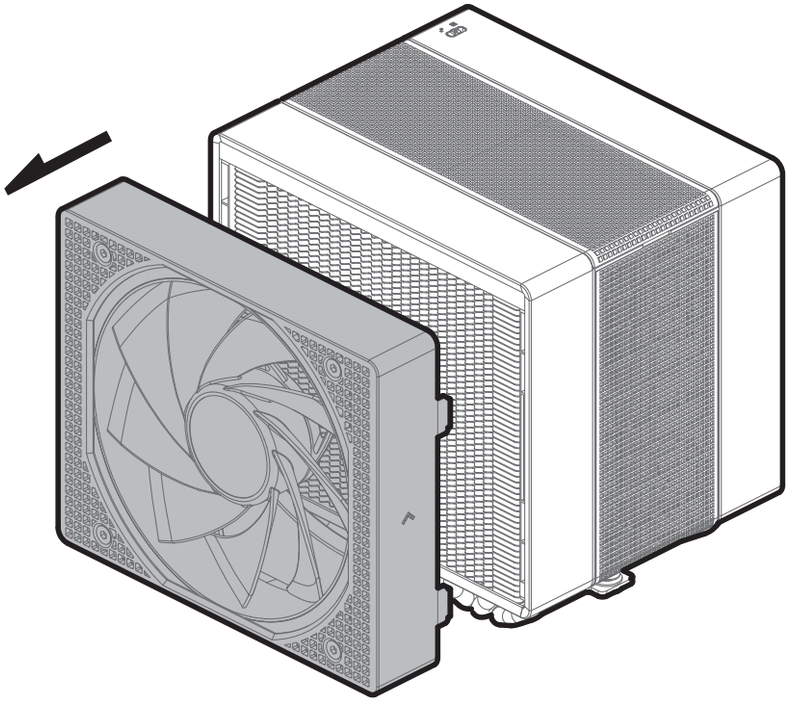

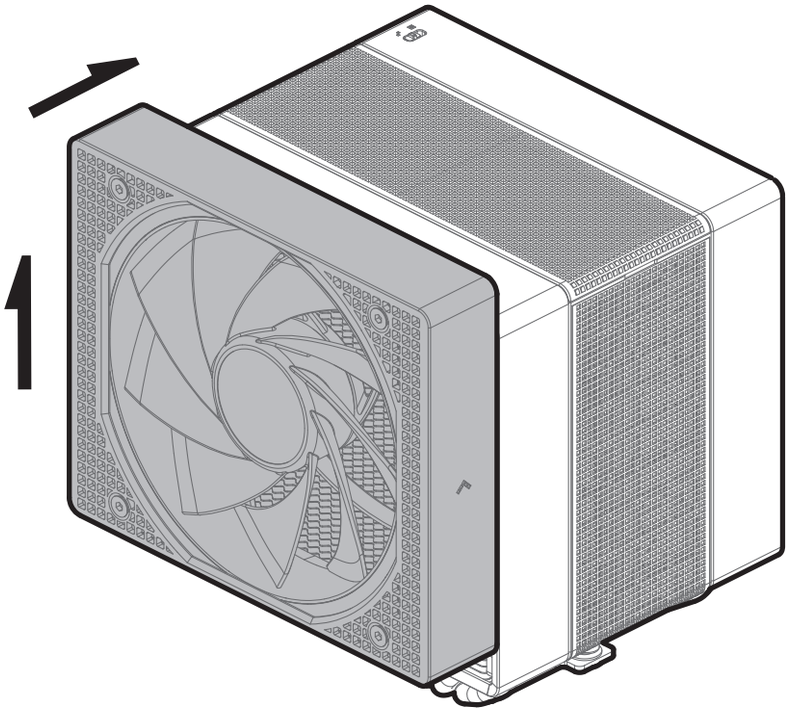

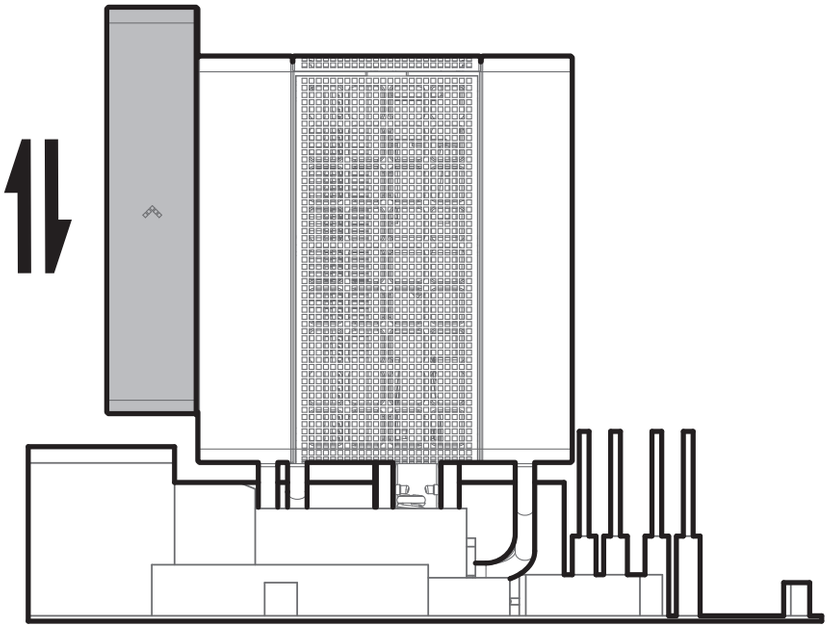

Connection

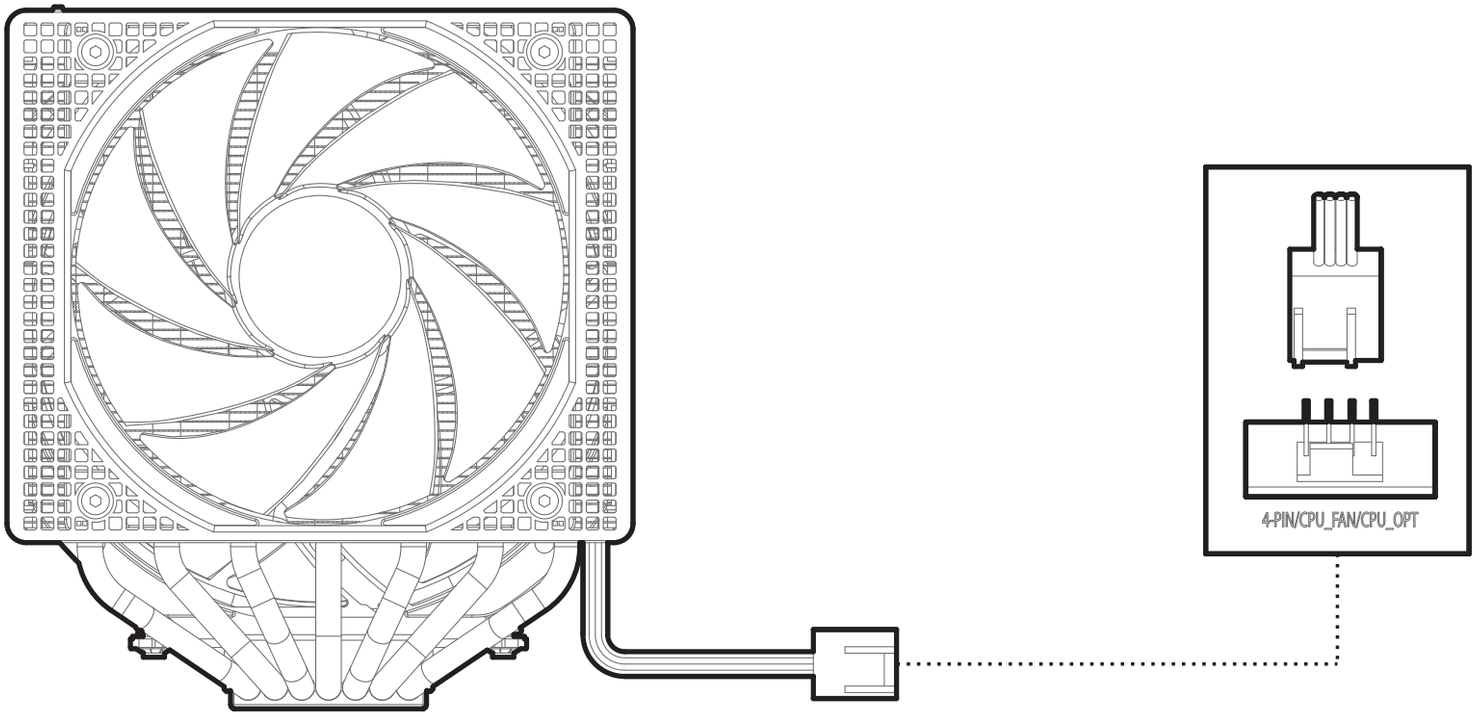

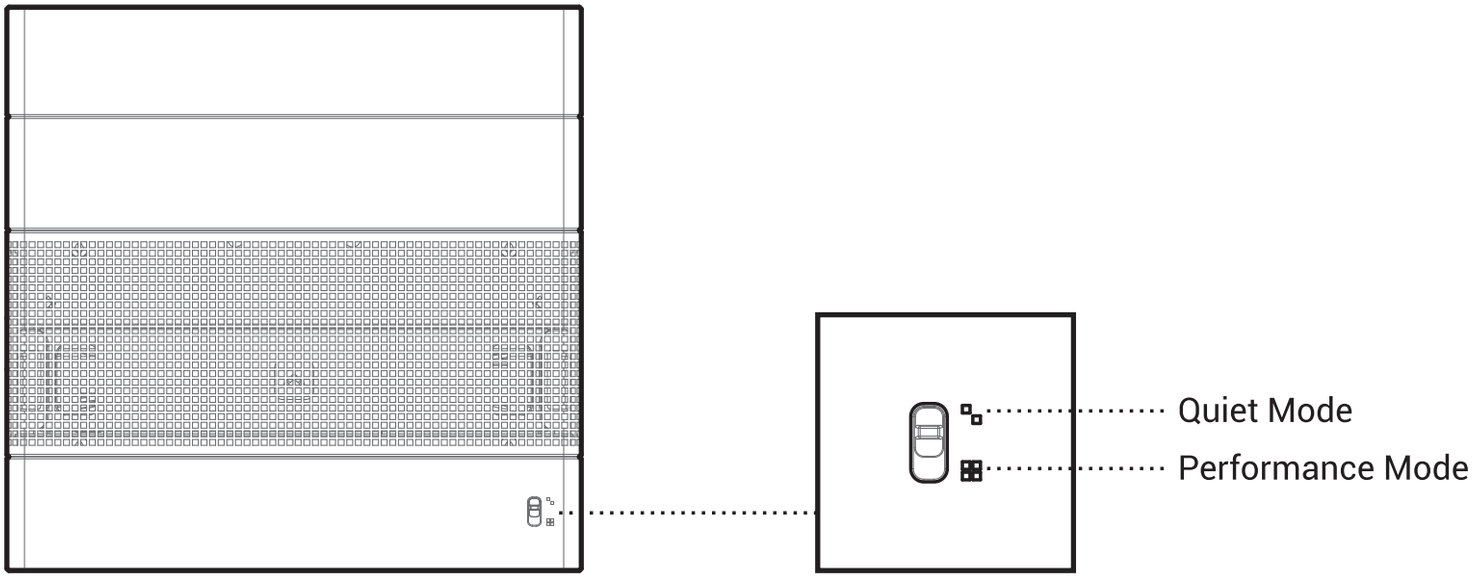

Free 12cm fan adapter

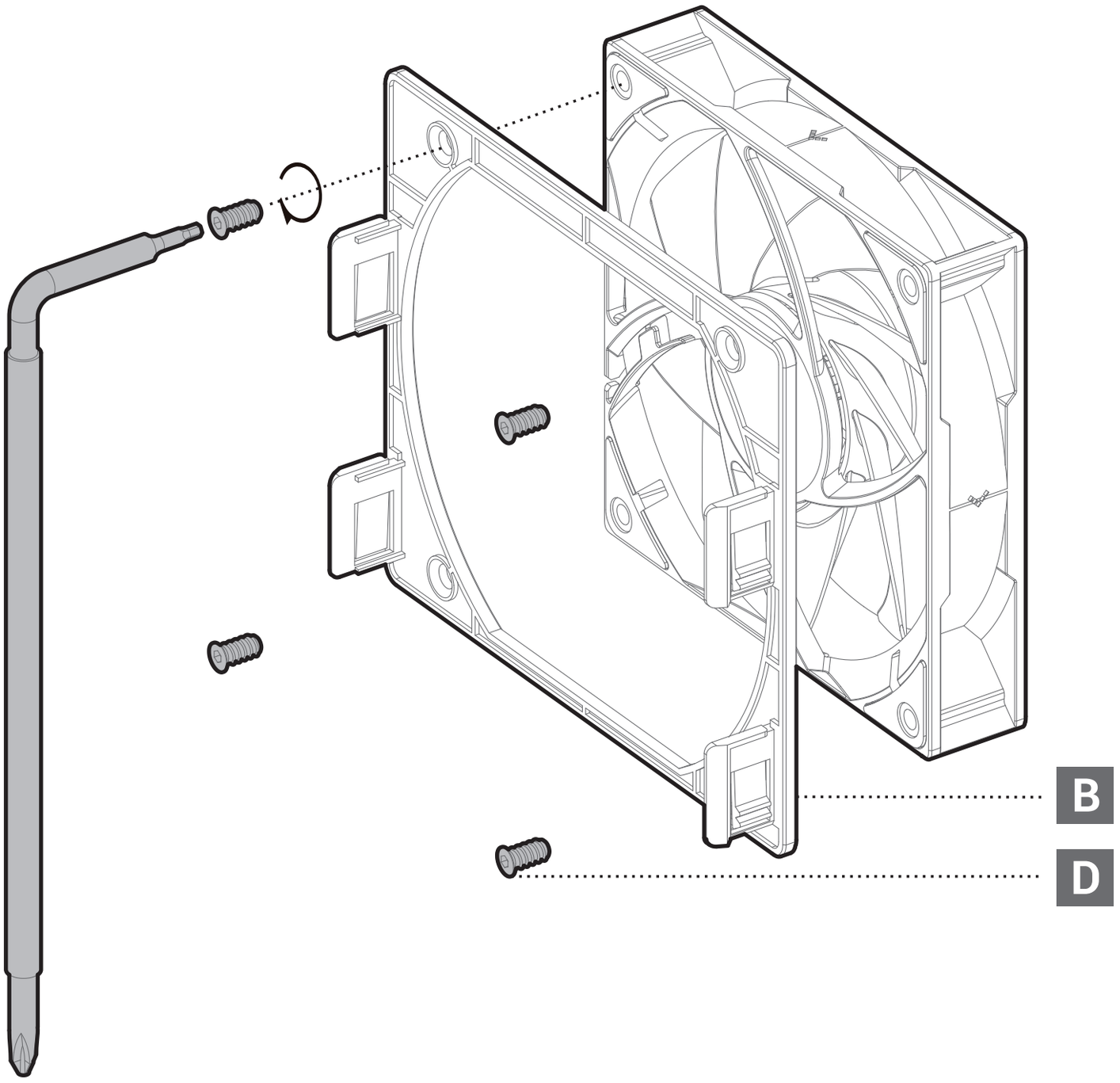

Free 12cm fan adapter

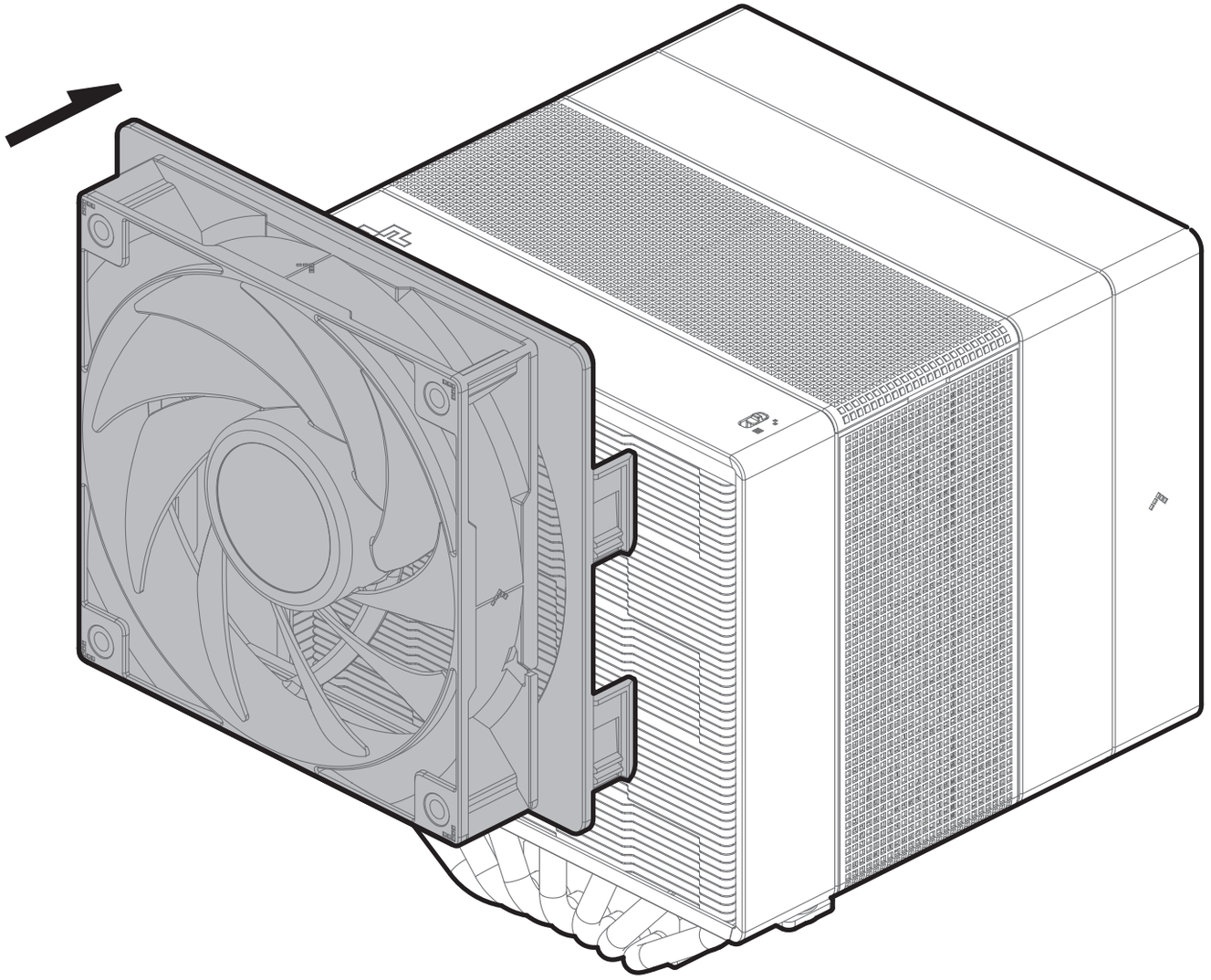

Free 12cm fan adapter

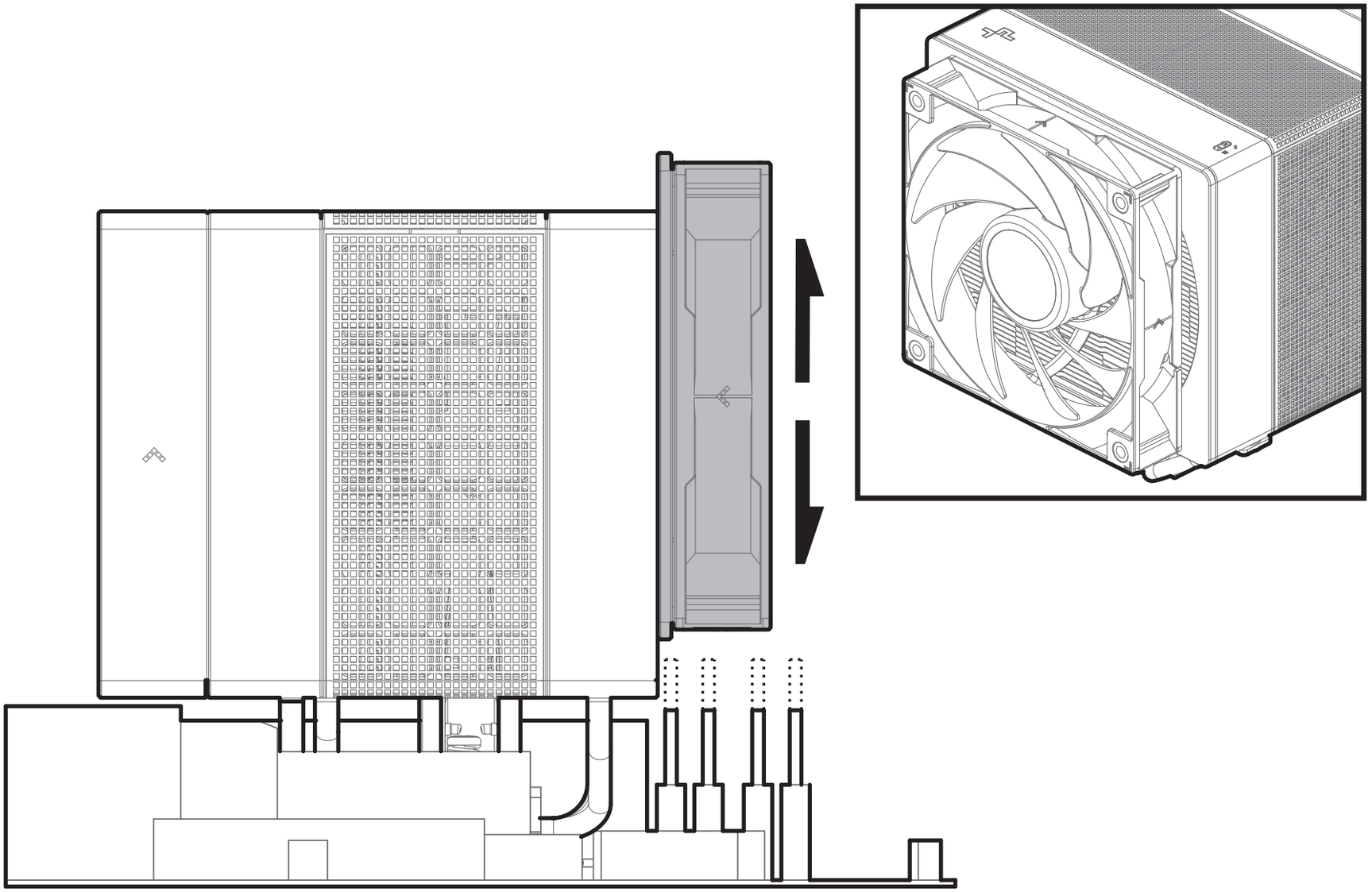

The fan can slide up and down.

Product Installation Instructions

The direction of the wind tunnel.

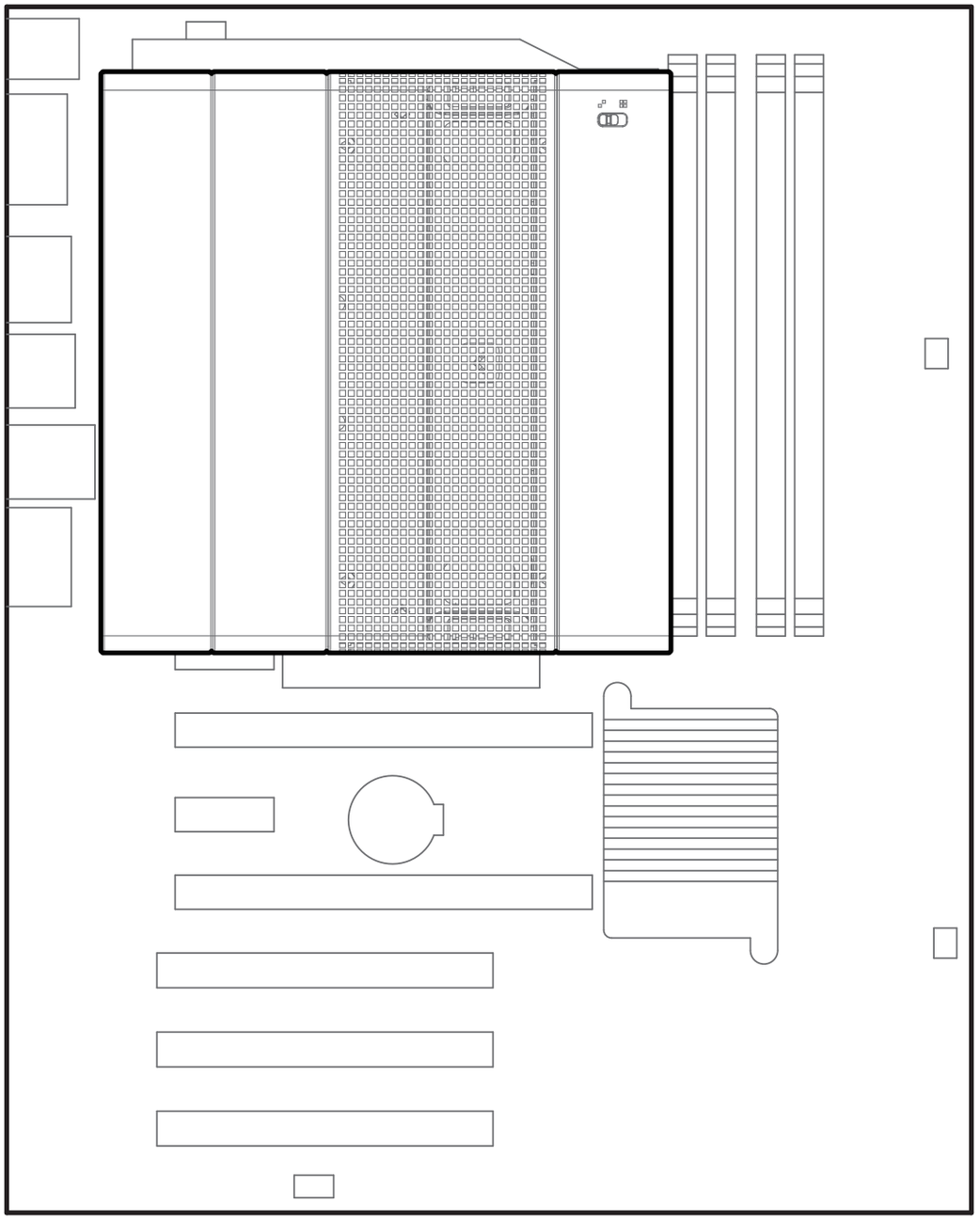

Installation direction.

部件名称	有毒有害物质或元素					
	铅 (Pb)	汞 (Hg)	镉 (Cd)	六价铬 (Cr+6)	多溴联苯 (PBB)	多溴二苯醚 (PBDE)
散热片	○	○	○	○	○	○
塑胶	○	○	○	○	○	○
硅胶	○	○	○	○	○	○
集成电路	○	○	○	○	○	○
零件包	○	○	○	○	○	○

本表格依据SJ/T 11364的规定编制。
环保使用期限标识表示产品在正常工作温度和湿度等条件下的环保使用年限为10年。
○:表示该有害物质在该部件所有均质材料中的含量均在GB/T 26572规定的限量要求以下。
×:表示该有害物质至少在该部件的某一均质材料中的含量超出GB/T 26572规定的限量要求,
且因技术发展水平限制而无成熟方案替代,均符合欧盟RoHS法规环保指令。