Datasheet

Cloud Industrial 24/48V Mixed PoE Switch

WI-PCMS310GF-ALIEN-I

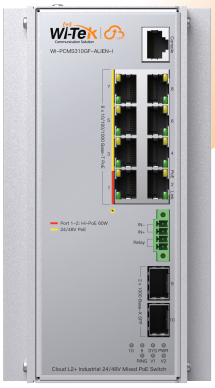

Overview

WI-PCMS310GF-ALIEN-I is a new Cloud L2+ Industrial 24/48V Mixed PoE Switch designed by Wi-Tek for industrial environments. Provides 8 10/100/1000Mbps Ethernet ports and 2 100/1000M SFP ports. Three power supplies can be connected simultaneously for redundant power supply to ensure uninterrupted operation of the device. The DC 3 booster power module supports a wide voltage input range of 9V to 52V DC and is suitable for various industrial power supplies or 12V/24V solar power system, meeting various power supply scenario applications.

It adopts a wide temperature design, a strong metal shell, good heat dissipation performance, can adapt to low temperature and high temperature, strong electromagnetic interference resistance. Widely used in high-speed monitoring systems, manufacturing, and other industrial scenarios. In addition, the device supports temperature and humidity detection, relay and other functions, which can significantly improve network reliability, security and management efficiency, and is suitable for various scenarios such as computer rooms, industrial environments and intelligent buildings.

The switch also supports Layer 2 management functions, such as 802.1Q VLAN, QinQ, port mirroring, STP, RSTP, MSTP, IGMP, QoS, DHCP, multicast, ACL, LLDP, 802.1X, fiber transceiver DDM, PoE management, ERPS protocol, IPv6 management, Web, SNMP, Telnet, TFTP, etc.

Features

Support 24V/48V PoE Output

Comply with the IEEE 802.3af/at standards, the PoE power for port1-2 is up to 60W, and the maximum output PoE Power Budget is 300W@V1/V2 DC power input, 150W@V3 DC(24V) power input, 60W@V3 DC(12V) power input, fully ensuring the power supply requirements for each port. All PoE ports are compatible with 24V Passive devices and standard-powered devices.

Switch DIP Mode to protect network reliability

Fast ring: support one-key fast ring configuration.
SCP: support one-key broadcast storm suppression configuration.

High Reliability

Support STP/ RSTP/ MSTP Layer 2 protection technology to ensure the stability of the local area network and include a backup connection to prevent when a working line fails, automatically provide a backup path to ensure that the local network is online for a long time, and network administrators can also Effectively suppress broadcast storms through IGMP Snooping technology.

High level protection design, makes it safe and reliable

6kV Surge Immunity and 15kV ESD protection design, ensure the stable and high performance operation.

Standard PoE Supply in Solar Power System

It supports a wide DC voltage input range of 9V to 52V. The WI-PCMS310GF-ALIEN-I can operate in conjunction with devices such as 12V/24V solar powered systems or outdoor environments. During the day, green energy from solar power or other renewable sources ensures the normal operation of the switch and powers connected PD devices.

Hard-shell, durable, efficient heat dissipation

No fan is required to ensure the stable operation of the product, no noise and quieter, suitable for various harsh industrial environments.

Smarter, Reliable, and Responsive Localized Linkage Control

This switch integrates Digital Input, Relay, and temperature/humidity detection functionalities, providing a comprehensive solution for device status and environmental monitoring. Through Digital Input, the switch can receive external digital signals and trigger predefined operations; through Relay, it can output control signals to drive external devices (such as alarm, indicator or fan), enabling precise device linkage control. The temperature and humidity detection feature monitors environmental conditions in real-time, ensuring optimal operating conditions for equipment. These functionalities significantly enhance the system's anti-interference capability and reliability, making it suitable for industrial automation, data centers, security monitoring, and other scenarios, helping to build intelligent and highly reliable network infrastructure.

Cloud Management

Wi-Tek Cloud Switch supports not only web interface and CLI management but also Wi-Tek Cloud management. Users can view the monitoring network status, make remote configurations, and troubleshoot anywhere and anytime.

Specifications

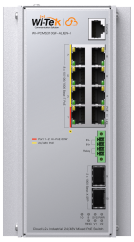

Model	WI-PCMS310GF-ALIEN-I
Hardware Version	V1
Hardware Features	
Interfaces	
Downlink Ports	8*10/100/1000Mbps RJ45 Ports
Uplink Ports	2*1000Mbps SFP Slots
Management Port	1*Console port
Performance	
Memory and Flash	128MB Memory 32MB Flash
PoE	
PoE Port	Port 1-8
PoE Standard	Port 1-2: Hi-PoE 60W or 24V Passive PoE Port 3-8: 802.3af/at 30W or 24V Passive PoE
PoE Pin Assignment	Port 1-2: 1/2(+), 3/6(-) , 4/5(+), 7/8(-) Port 3-8: 4/5(+), 7/8(-)
PoE Power	60W max for port 1-2, 30W max for port 3-8; 300W Max. for PoE power budget at DC1/DC2 Input 200W Max. for PoE power budget at DC3(48V/52V) Input 150W Max. for PoE power budget at DC3(24V) Input 60W Max. for PoE power budget at DC3(12V) Input
Switch Property	
Standards and Protocols	IEEE802.3, IEEE802.1Q, IEEE802.3u, IEEE802.1p, IEEE802.3ab, IEEE802.3ad, IEEE802.3z, IEEE802.1D, IEEE802.3x, IEEE802.1x, IEEE802.3af, IEEE802.3at

Model	WI-PCMS310GF-ALIEN-I
Forwarding Mode	Store and Forward
Switching Capacity	20Gbps
Packet Forwarding Rate	14.88Mpps
MAC Address Table	8k
Jumbo Frame	9216Byte
Power Supply	
Input Power	DC1/DC2: 37-57V IN DC3: 9-52V IN
Power Consumption	Idle: 9.7W 100% traffic Rate with PoE: 309.7W Max
Physical Characteristics	
LED Indicators	**PWR:** On: The switch is powered on Off: The switch is powered off or power supply is abnormal **SYS:** Off: The system is being started or abnormal Blinking: The system is working normally **V1:** On: Power DC 1 is detected **V2:** On: Power DC 2 is detected **Ring:** On: Ring network function enabled Off: Ring network function disabled **PoE:** Orange on: PoE enabled Off: PoE disabled **Link:** Green on: Port connected Blinking: Data transmission Off: Port disconnected **9,10 SFP Indicator:** On: Port connected Off: Port disconnected

Model		WI-PCMS310GF-ALIEN-I
Connector		Temperature&humidity sensor(TMS), Digital Input, Relay
DIP Switch		Fast Ring One-key enable fast ring function,support fast network self-healing SCP Enable storm suppression to improve network reliability
Reset		Hold for >5 sec. to restore factory default
Fan Quantity		Fanless
Dimensions		100*120*180 mm
Weight		2.04 kg
Installation		DIN-rail
Reliability	Surge Immunity	Common mode: 6kV Differential mode: 2kV
	ESD Protection	Contact discharge: 8kV Air discharge: 15kV
Operating Environment		-40~75℃, 10%-90% RH non-condensing
Storage Environment		-40~85 ℃, 5%-90% RH non-condensing
Certification		
Certification		CE, FCC, RoHS, UKCA, RCM

Model	WI-PCMS310GF-ALIEN-I
Software Features	
QoS	8 priority queues
	802.1p CoS/DSCP priority
	Queue scheduling(SP (Strict Priority);WRR (Weighted Round Robin);SP+WRR
	Bandwidth Control(Port/Flow based Rating Limiting)
	Policy Config
	Class-Map Config
	Policy-Map Config
	Policy Mark Config
	Policy Bandwidth
	Policy VLAN
L2+	IPv4/IPv6 Interfaces
	Static Routing(512 static routes)
	Static ARP
	8K ARP Entries
	ARP timeout
	Gratuitous ARP
	DHCP Server
	DHCP Relay
	DHCP L2 Relay
Link Aggregation	Static link aggregation
	802.3ad LACP
	Up to 8 aggregation groups and up to 8 ports per group
Spanning Tree Protocol	802.1d STP
	802.1w RSTP
	802.1s MSTP
	STP Security: TC Protect, BPDU Filter, BPDU Protect, Root Protect, Loop Protect

Model	WI-PCMS310GF-ALIEN-I
Loopback Detection	Port-based
	VLAN based
Flow Control	802.3x Flow Control
	HOL Blocking Prevention
Mirroring	Port Mirroring
	CPU Mirroring
	One-to-One
	Many-to-One
	Tx/Rx/Both
L2 Multicast	Supports IPv4/IPv6 IGMP groups
	IGMP Snooping
	IGMP v1/v2/v3 Snooping
	Immediately-leave
	IGMP Snooping Querier
	IGMP Authentication
	IGMP Proxy
	MVR
	MLD Snooping
	MLD v1/v2 Snooping
	Immediately-leave
	MLD Snooping Querier
	Static Group Config
	Limited IP Multicast
	Multicast Filtering
VLAN	VLAN Group
	Max. 4K VLAN Groups
	802.1Q tag VLAN
	MAC VLAN
	Protocol VLAN

Model	WI-PCMS310GF-ALIEN-I
VLAN	GVRP
	Voice VLAN
	Port-Based QinQ
	Tunnel TPID（0x8100，0x9100，0x9200，Protocol ID）
	OUI-Based VLAN
Access Control List	MAC ACL
	Source MAC
	Destination MAC
	Packet Type（Untagged-eth2，Untagged-802.3，Tagged-eth2，Tagged-802.3）
	VLAN ID
	Ether Type
	IP ACL
	Source IP
	Destination IP
	Fragment Packet
	IP Protocol
	IP Precedence
	TCP/UDP Port
	DSCP/IP TOS
	Combined ACL
	IPv6 ACL
	icmp/tcp/udp
	Mirroring
	Attached Direction(Ingress/Traffic-statistic)
	QoS Remark
	ACL apply to Port/VLAN
	Time-based ACL

Model	WI-PCMS310GF-ALIEN-I
Access Control List	Ipv6 ACL
	Policy
	ICMP/TCP/UDP
	Mirroring
	Attached Direction(Ingress/Traffic-statistic)
	QoS Remark
	ACL apply to Port/VLAN
	Time-based ACL
Security	IP-MAC-Port Binding
	DHCP Snooping
	ARP Inspection
	Ipv4 secure-port
	DHCPv6 Snooping
	snooping remote-id
	snooping subscriber-id
	Ipv6 security-ra
	DoS Defend
	DHCP Filter
	Static/Dynamic Port Security
	Broadcast/Multicast/Unicast Storm Control
	kbps/pps control mode
	802.1X
	Port base authentication
	Mac base authentication
	VLAN Assignment

Model	WI-PCMS310GF-ALIEN-I
Security	Guest VLAN
	Support RADIUS authentication and accountability
	AAA (including TACACS+)
	Port Isolation
	Secure web management through HTTPS with SSLv3/TLS 1.2
	Secure Command Line Interface (CLI) management with SSHv1/SSHv2
	IP/Port/MAC-based access control
IPv6	Ipv6 Dual IPv4/IPv6
	Multicast Listener Discovery (MLD) Snooping
	IPv6 ACL
	IPv6 Interface
	Static IPv6 Routing
	IPv6 neighbor discovery (ND)
	Path maximum transmission unit (MTU) discovery
	Internet Control Message Protocol (ICMP) version 6
	TCPv6/UDPv6
	IPv6 applications
	DHCPv6 Client
	Ping6
	Tracert6
	Telnet (v6)
	IPv6 SNMP
	IPv6 SSH
	IPv6 SSL
	Http/Https

Model	WI-PCMS310GF-ALIEN-I
Advanced Features	802.3ah Ethernet Link OAM
	ERPS
	Cloud Management
	ONVIF(ONVIF Detection,ONVIF Server(NLM))
	Batch Firmware Upgrading
	Intelligent Network Monitoring Abnormal Event Warnings
	Automatic Device Discovery
	Support Remote Management
	Support Cloud VLAN Configuration
	Support Topology Display
	Support Cloud Control Port Configuration
Management Features	Web-based GUI
	Command Line Interface (CLI) through console port, telnet
	SNMPv1/v2c/v3
	Trap/Inform
	RMON (1, 2, 3, 9 groups)
	DHCP/BOOTP Client
	802.1ab LLDP/LLDP-MED
	CPU Monitoring
	Cable Diagnostics
	EEE
	Password Recovery
	SNTP
	System Log
System	Ping
	Traceroute
	Firmware Upgrade
	DDMI

Model	WI-PCMS310GF-ALIEN-I
System	HTTP/HTTPS
	FTP and TFTP
	Dual Configuration
	System IP(Static IP, Dynamic IP)
	Debug
	User Management
	CPU/Memory Monitor
	Config Restore/Backup
	Link Layer Discovery Protocol (LLDP)
Alarm Configuration	System Monitor Info
	Alarm Input Config
	Alarm Output Config

WI-PCMS310GF-ALIEN-I

Dimensions (mm)

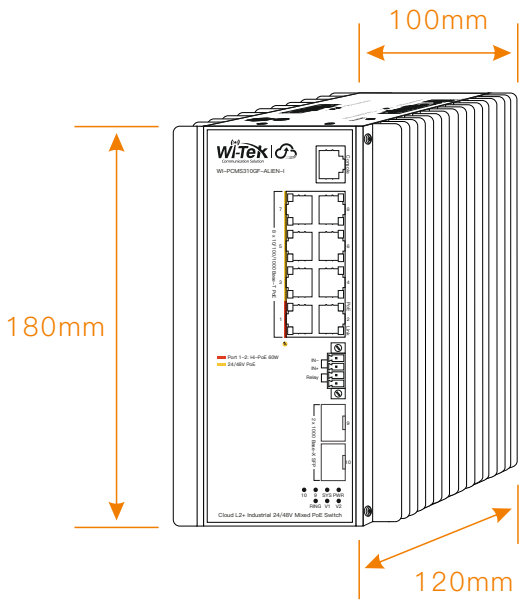

Front Panel

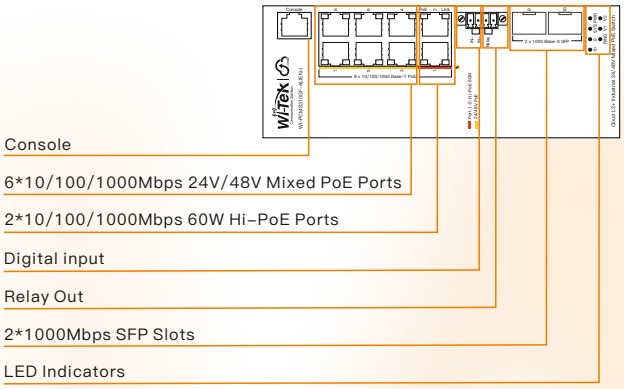

Side Panel

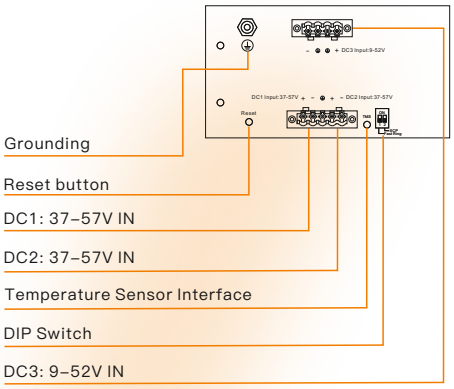

Package Contents

Welcome to order our products. After purchasing, you will receive:

Items	Quantity
Switch	1 pcs
Serial line	1 pcs
Temperature/humidity Sensor	1 pcs
Phoenix Terminal	3 pcs
DIN-rail Mount Accessory	1 pcs
Quick Installation Guide	1 pcs

Wireless-Tek Technology Limited
Address:Building 3, Units 1801-1807, 1812, Huaqiang Era Plaza, Tangwei Community, Fuhai Street, Bao'an District, Shenzhen City, Guangdong Province, China.
Website:www.wireless-tek.com
Tel:86-0755-32811290
Email:sales@wireless-tek.com
Technical Support:tech@wireless-tek.com

Technical Support
Cloud Management
Company Website

©2025 Wireless-tek Technology Limited. All Rights Reserved.
Version,V1.0, updated 2025.06.18.
The information in this document is subject to change without notice.
Every effort has been made in the preparation of this document to ensure accuracy of the contents, but all statements, information, and recommendations in this document do not constitute a warranty of any kind, express or implied.