INFORMATION



Eco-conscious 27” IPS monitor for modern workplaces

The ProLite XB2797HSU is perfect if you want a compact, high-performance display that fits seamlessly into a multi-monitor setup. The four-side slim bezel gives you a clean, modern workspace and uninterrupted visuals across screens.

You’ll enjoy sharp, accurate colours and wide viewing angles thanks to the IPS panel, while the 120Hz refresh rate keeps everything smooth and responsive. Whether you're working on documents, editing content or browsing, flicker-free technology and a blue light reducer help protect your eyes during long sessions.

Adjust the screen to suit your posture with a fully ergonomic stand offering 15cm height adjustment, tilt, swivel and pivot. Built-in speakers, a four-port USB hub, HDMI, DisplayPort and a headphone socket keep your setup simple and efficient.

And with EPEAT and TCO certifications and an Energy label C, you’re choosing a monitor that supports sustainability without compromising on performance.

FEATURES



Multi-screen setup for a panoramic workspace

Connect multiple ultra-slim bezel monitors to create a panoramic workspace, keep your apps in view, streamline multitasking, and boost productivity.



Versatile connectivity for all your devices

Connect multiple devices and accessories in one simple step with HDMI, DisplayPort and the USB hub, streamlining your workspace for maximum efficiency and ensuring a tidy, uninterrupted workflow.

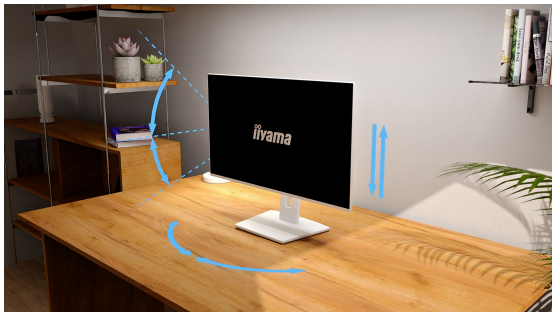

Adjustable stand for optimal comfort

Find your perfect screen position easily and maintain a healthy, comfortable posture all day long. Thanks to its fully adjustable stand, you can effortlessly adapt the monitor to your needs. Raise or lower the height, swivel left or right, or tilt the screen to reduce glare and find the optimal viewing angle. Whether you're working, designing, or attending long video calls, this flexibility helps reduce neck and back strain, improving both comfort and productivity throughout your day.



Built-in audio without extra clutter

SPECIFICATION

01 DISPLAY CHARACTERISTICS

Design	4-side slim bezel
Diagonal	27", 68.6cm
Panel	IPS
Native resolution	1920 x 1080 @120Hz (2.1 megapixel Full HD)
Aspect ratio	16:9
Panel brightness	350 cd/m²
Static contrast	1500:1
Advanced contrast	80M:1
Response time (MPRT)	1ms
Viewing zone	horizontal/vertical: 178°/ 178°, right/left: 89°/89°, up/down: 89°/89°
Colour support	16.7mln (sRGB: 99%; NTSC: 72%)
Horizontal Sync	30 - 140kHz
Viewable area W x H	597.9 x 363.3mm, 23.5 x 13.2"
Pixel pitch	0.311mm
Frame Colour	matte, white

02 INTERFACES / CONNECTORS / CONTROLS

Signal input	HDMI x1 (v.1.4) DisplayPort x1 (v.1.2)
USB HUB	x4 ((2x Type-A v.3.2 Gen 1 (5Gbps, 4.5W) 2x Type-C (5Gbps, 4.5W))
HDCP	yes
Headphone connector	yes

03 FEATURES

Flicker free	yes
OSD languages	EN, DE, FR, ES, IT, RU, JP, CZ, NL, PL, UA
Control buttons	Joystick: (Centre) Power/MenuPower, Up/Signal Select, Down, Left/Shortcut, Right/Volume
User controls	picture adjust (brightness, contrast, ECO, ACR, OD, motion blur reduction, Adpative Sync), colour settings (i-Style colour, RGB range, colour temperature, user preset), OSD (OSD H. position, OSD V. position, OSD rotate, OSD background, DDC/CI control, display information), language, extra1 (sharpness, video mode adjust, opening logo, power LED), Extra2 (shortcut, FW version), input select, audio settings (volume, mute audio), reset
Speakers	2 x 2W
Convenience	Kensington-lock™ prepared, DDC/CI, DDC2B, Mac OSX

04 MECHANICAL

Display position adjustments	height, swivel, tilt, pivot (rotation both sides)
Height adjustment	150mm
Rotation (PIVOT function)	90°
Swivel stand	120°; ° left; 60° right
Tilt angle	23° up; 5° down
VESA mounting	100 x 100mm

05 ACCESSORIES INCLUDED

Cables	power (1.5m), USB (1.5m), HDMI (1.5m), DP (1.8m)
Other	quick start guide, safety guide

06 POWER MANAGEMENT

Power supply unit	internal
Power supply	AC 100 - 240V, 50/60Hz
Power usage	14W default, 0.5W stand by, 0.3W off mode

07 SUSTAINABILITY

Regulations	TCO Certified, CE, TÜV-GS, EAC, VCCI-B, PSE, RoHS support, ErP, WEEE, REACH, UKCA
Energy efficiency class (Regulation (EU) 2017/1369)	C
REACH SVHC	above 0.1%: Lead, Lead monoxide, Diboron trioxide
Warranty	5 years (for details and eligible countries please check the Warranty section of our website)

08 DIMENSIONS / WEIGHT

Product dimensions W x H x D	611.5 x 402 (547) x 209.5mm
Box dimensions W x H x D	691 x 447 x 142mm
Weight (without box)	5.4kg
Weight (with box)	7.8kg
EAN code	4948570125869

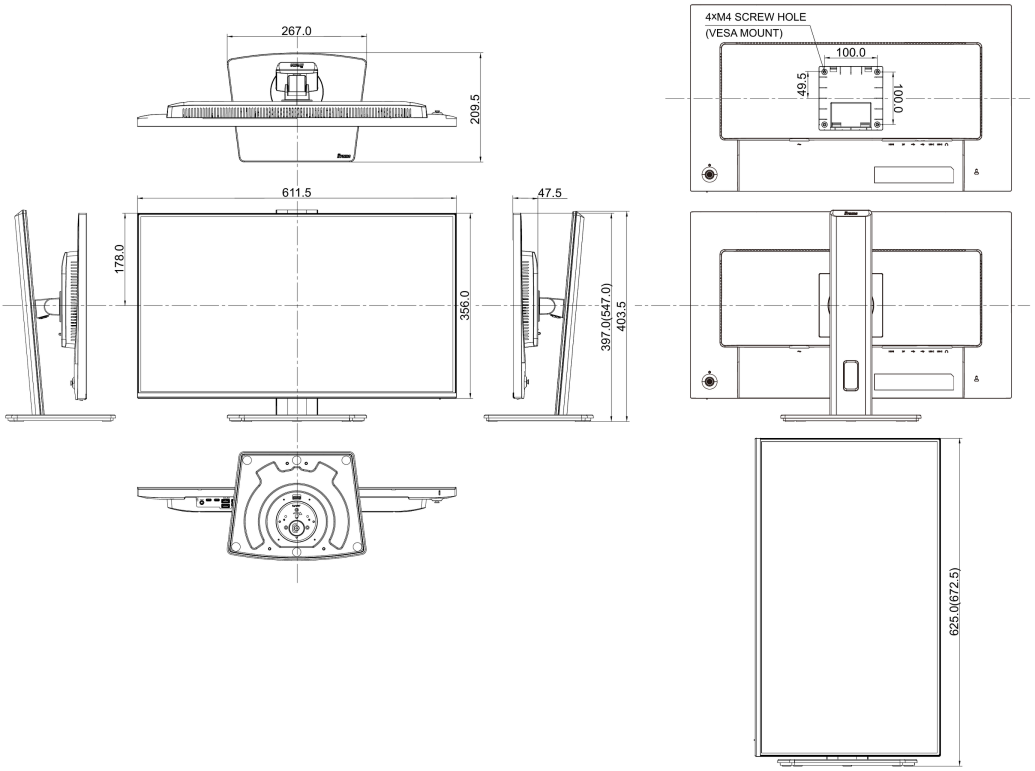
267.0
209.5
611.5
178.0
356.0
47.5
397.0(547.0)
403.5
4xM4 SCREW HOLE
(VESA MOUNT)
100.0
49.5
100.0
625.0(672.5)

GALLERY


iiyama
ProLite
XB2797HSU
27"
68.6 cm
IPS
1920x1080
SLIM BEZEL
15cm


iiyama
ProLite
XB2797HSU
27"
68.6cm
IPS
1920x1080
SLIM BEZEL
15cm
5 YEAR WARRANTY


iiyama
ProLite
XB2797HSU
27"
68.6cm
IPS
1920x1080
SLIM BEZEL
15cm


iiyama
ProLite
XB2797HSU
27"
68.6cm
IPS
1920x1080
SLIM BEZEL
15cm


iiyama
ProLite
XB2797HSU
27"
68.6cm
IPS
1920x1080
SLIM BEZEL
15cm


iiyama
ProLite
XB2797HSU
27"
68.6cm
IPS
1920x1080
SLIM BEZEL
15cm
5 YEAR WARRANTY


iiyama


ProLite
XB2797HSU


27"
68.6cm
IPS
1920x1080
SLIM BEZEL

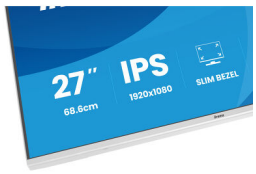
27"
68.6cm
IPS
1920x1080
SLIM BEZEL











All trademarks and registered trademarks acknowledged. E & O E. Specification subject to change without notice. All LCD's comply with ISO-9241-307:2008 in connection with pixel defects. **© IIYAMA CORPORATION. ALL RIGHTS RESERVED**